Service
Service
Service

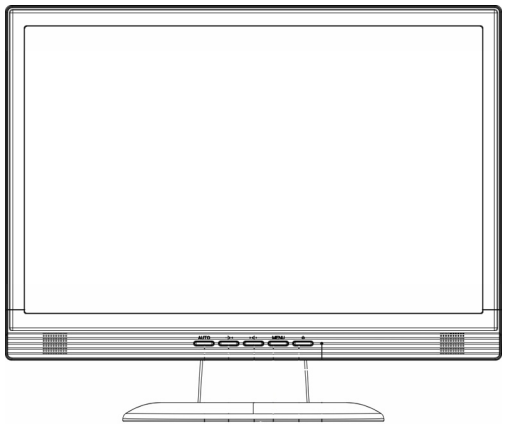

Service Manual

Horizontal Frequency

55.5 kHz - 70.6 kHz

TABLE OF CONTENTS

Description	Page	Description	Page
Table Of Contents	1	5.2.Electrical Block Diagram	16
Revision List	2	6.Schematic	18
Important Safety Notice	3	6.1.Main Board	18
1.Monitor Specification	4	6.2. Power Board	23
2.LCD Monitor Description	5	7.PCB Layout	26
3.Operation Instruction	6	7.1.Main Board	26
3.1.General Instructions	6	7.2.Power Board	28
3.2.Control Button	6	7.3 Key Board	30
3.3.Adjusting the Picture	7	8. Maintainability	31
4.Input/Output Specification	10	8.1.Equipments and Tools Requirement	31
4.1.Input Signal Connector	10	8.2.Trouble Shooting	32
4.2.Factory Preset Display Modes	11	9.White-Balance Luminance adjustment	38
4.3.Panel Specification	12	10.Monitor Exploded View	40
5.Block Diagram	14	11.BOM List	41
5.1.Software Flow Chart	14		

SAFETY NOTICE

ANY PERSON ATTEMPTING TO SERVICE THIS CHASSIS MUST FAMILIARIZE HIMSELF WITH THE CHASSIS AND BE AWARE OF THE NECESSARY SAFETY PRECAUTIONS TO BE USED WHEN SERVICING ELECTRONIC EQUIPMENT CONTAINING HIGH VOLTAGES.

CAUTION: USE A SEPARATE ISOLATION TRANSFOMER FOR THIS UNIT WHEN SERVICING

Revision List

Revision	Date	Revision History	TPV Model
A00	Mar.-14-2008	First Version Release	T77HRTNCMWPUDN

Important Safety Notice

Proper service and repair is important to the safe, reliable operation of all AOC Company Equipment. The service procedures recommended by AOC and described in this service manual are effective methods of performing service operations. Some of these service operations require the use of tools specially designed for the purpose. The special tools should be used when and as recommended.

It is important to note that this manual contains various CAUTIONS and NOTICES which should be carefully read in order to minimize the risk of personal injury to service personnel. The possibility exists that improper service methods may damage the equipment. It is also important to understand that these CAUTIONS and NOTICES ARE NOT EXHAUSTIVE. AOC could not possibly know, evaluate and advise the service trade of all conceivable ways in which service might be done or of the possible hazardous consequences of each way. Consequently, AOC has not undertaken any such broad evaluation. Accordingly, a servicer who uses a service procedure or tool which is not recommended by AOC must first satisfy himself thoroughly that neither his safety nor the safe operation of the equipment will be jeopardized by the service method selected.
Hereafter throughout this manual, AOC Company will be referred to as AOC.

WARNING

Use of substitute replacement parts, which do not have the same, specified safety characteristics may create shock, fire, or other hazards.

Under no circumstances should the original design be modified or altered without written permission from AOC. AOC assumes no liability, express or implied, arising out of any unauthorized modification of design.
Servicer assumes all liability.

FOR PRODUCTS CONTAINING LASER:
DANGER-Invisible laser radiation when open AVOID DIRECT EXPOSURE TO BEAM.
CAUTION-Use of controls or adjustments or performance of procedures other than those specified herein may result in hazardous radiation exposure.
CAUTION -The use of optical instruments with this product will increase eye hazard.

TO ENSURE THE CONTINUED RELIABILITY OF THIS PRODUCT, USE ONLY ORIGINAL MANUFACTURER'S REPLACEMENT PARTS, WHICH ARE LISTED WITH THEIR PART NUMBERS IN THE PARTS LIST SECTION OF THIS SERVICE MANUAL.
Take care during handling the LCD module with backlight unit.
-Must mount the module using mounting holes arranged in four corners.
-Do not press on the panel, edge of the frame strongly or electric shock as this will result in damage to the screen.
-Do not scratch or press on the panel with any sharp objects, such as pencil or pen as this may result in damage to the panel.
-Protect the module from the ESD as it may damage the electronic circuit (C-MOS).
-Make certain that treatment person’s body is grounded through wristband.
-Do not leave the module in high temperature and in areas of high humidity for a long time.
-Avoid contact with water as it may a short circuit within the module.
-If the surface of panel becomes dirty, please wipe it off with a soft material. (Cleaning with a dirty or rough cloth may damage the panel.)

1. Monitor Specifications

Items	Descriptions	
LCD Panel	Driving system	TFT Color LCD
	Type	HSD170MGW1-B00
	Size	43.2cm (17")
	Pixel pitch	0.255mm(H)x 0.255mm(V)
	Viewable angle	160˚ (H) 160˚ (V) (TYPE)
	Response time (type)	5 ms
Input	Video	R,G,B Analog Interface
		Digital Interface
	Connector	15-pin D-Sub, 24pin DVI
	Video Signal	Analog:0.7Vp-p(standard),75 OHM, Positive
		Digital signal
	Sync. Type	H/V TTL
	H-Frequency	55.5 kHz - 70.6 kHz
	V-Frequency	55 Hz - 75 Hz
Power Consumption	ON Mode	≤37W
	OFF Mode	≤1W
Contrast Ratio	600:1	
Dot Clock	135 MHz	
White Luminance	300cd/m^2	
Max. Resolution	1440 x 900 (60 Hz)	
Display Color	16.2M colors	
Plug & Play	VESA DDC2B™	
Power Source	100~240VAC,47~63Hz	
Weight (monitor only)	3.1 kg	
Environmental Considerations	Operating Temp: 5°C to 35°C Storage Temp: -20°C to 60°C Operating Humidity: 10% to 85%	
Regulations	**cULus/FCC/CE**	

2. LCD Monitor Description

The LCD MONITOR will contain a main board, a power board and a key board which house the flat panel control logic, brightness control logic and DDC.

The power board will provide AC to DC Inverter voltage to drive the backlight of panel and the main board chips each voltage.

Monitor Block Diagram

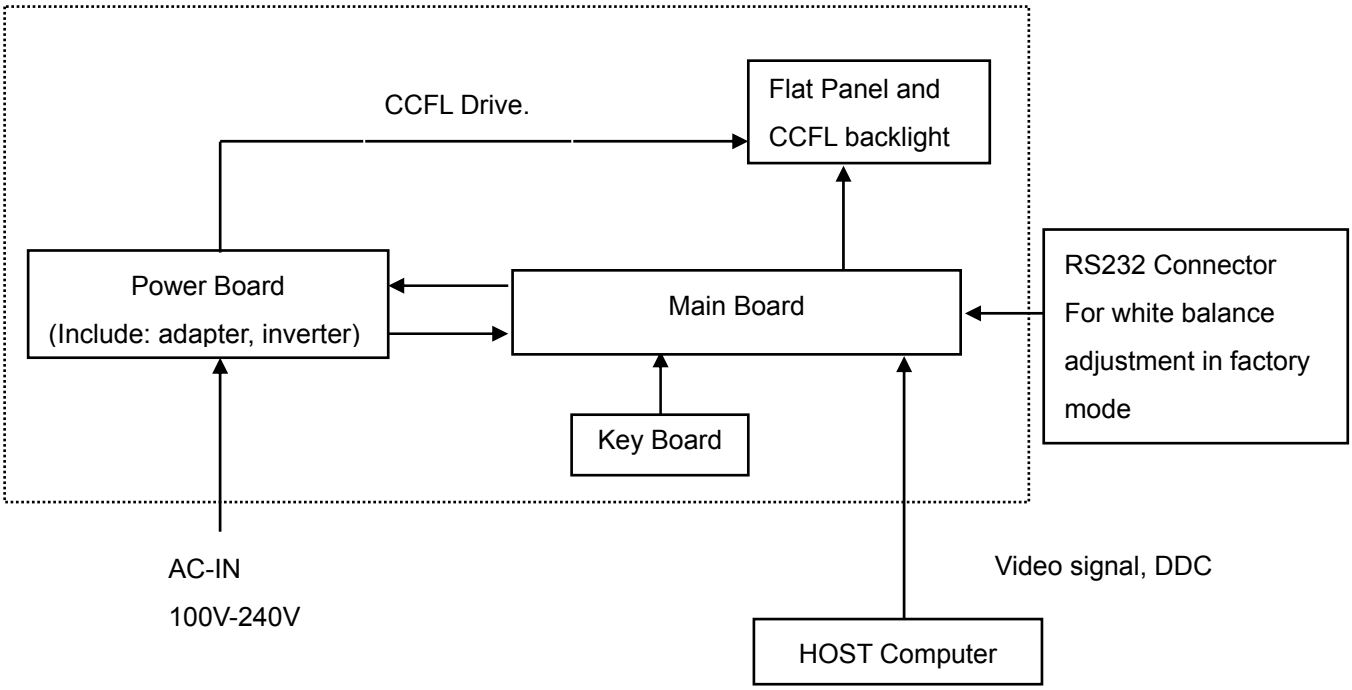

3. Operating Instructions

3.1 General Instructions

Press the power button to turn the monitor on or off. The control buttons are located at front panel of the monitor.

By changing these settings, the picture can be adjusted to your personal preferences.

- The power cord should be connected.
- Connect the video cable from the monitor to the video card.
- Press the power button to turn on the monitor, the power indicator will light up.

3.2 Control Buttons

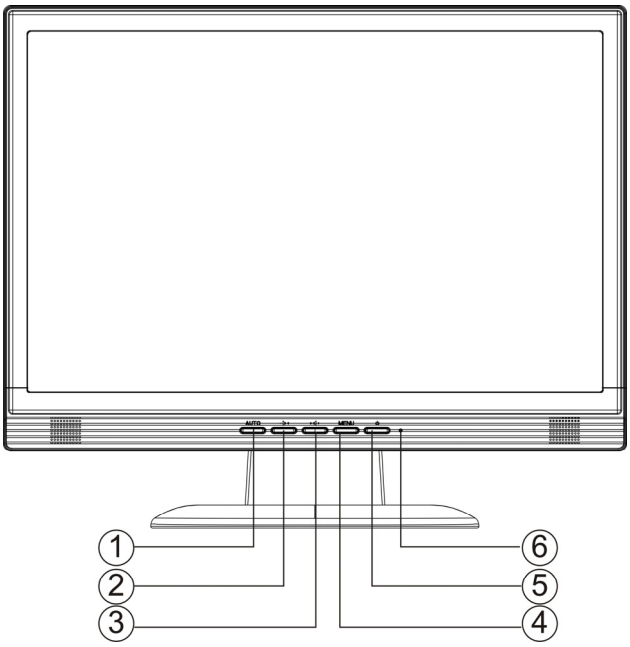

1. Auto Adjust button / Exit

2. ECO mode/-

3. +/ Volume

4. MENU / ENTER

5. Power Button

6. LED

3.3 Adjusting the Picture

OSD Settings

1. Press the MENU-button to activate the OSD window.
2. Press < or > to navigate through the functions. Once the desired function is highlighted, press the MENU-button to activate it. If the function selected has a sub-menu, press < or > again to navigate through the sub-menu functions. Once the desired function is highlighted, press MENU-button to activate it.
3. Press < or > to change the settings of the selected function.
4. To exit and save, select the exit function. If you want to adjust any other function, repeat steps 2-3.

OSD functions

Main Menu Item	Main Menu Icon	Sub Menu Item	Sub Menu	Description
Luminance		Brightness		Backlight Adjustment
		Contrast		Contrast from Digital-register.
		Eco	Standard	Standard Mode
			Text	Text Mode
			Internet	Internet Mode
			Game	Game Mode
			Movie	Movie Mode
			Sports	Sports Mode
		Gamma	Gamma1	Adjust to Gamma1
			Gamma2	Adjust to Gamma 2
			Gamma3	Adjust to Gamma 3
		DCR	Off	Disable dynamic contrast ratio
			On	Enable dynamic contrast ratio

Image Setup		Clock		Adjust picture Clock to reduce Vertical-Line noise.
		Focus		Adjust Picture Phase to reduce Horizontal-Line noise
		H.Position		Adjust the horizontal position of the picture.
		V.Position		Adjust the vertical position of the picture.
Color Temp.		Warm		Recall Warm Color Temperature from EEPROM.
		Normal		Recall Normal Color Temperature from EEPROM.
		Cool		Recall Cool Color Temperature from EEPROM.
		sRGB		Recall SRGB Color Temperature from EEPROM.
		User	User-B	Blue Gain from Digital-register
			User-G	Green Gain Digital-register.
			User-R	Red Gain from Digital-register
			User-Y	Yellow Gain from Digital-register
			User-C	Cyan Gain from Digital-register
			User-M	Magenta Gain from Digital-register
Color Boost		Full Enhance	on or off	Disable or Enable Full Enhance Mode
		Nature Skin	on or off	Disable or Enable Nature Skin Mode
		Green Field	on or off	Disable or Enable Green Field Mode
		Sky-blue	on or off	Disable or Enable Sky-blue Mode
		AutoDetect	on or off	Disable or Enable AutoDetect Mode
		Demo	on or off	Disable or Enable Demo
Picture Boost		Frame Size		Adjust Frame Size
		Brightness		Adjust Frame Brightness
		Contrast		Adjust Frame Contrast
		Hue		Adjust Frame Hue
		Saturation		Adjust Frame Saturation
		Position		Adjust Frame Position
		Bright Frame	on or off	Disable or Enable Bright Frame
OSD Setup		H.Position		Adjust the horizontal position of OSD
		V.Position		Adjust the vertical position of OSD
		Timeout		Adjust the OSD Timeout
		Language		Select the OSD language

Extra		Input Select	Digital	Select Digital Signal Source as Input
			Analog	Select Analog Signal Source as Input
		Auto Config		Auto adjust the picture to default
		DDC/CI		Turn ON/OFF DDC/CI Support
		Reset	yes or no	Reset the menu to default
		Information		Show the information of the main image and sub-image source

4. Input/output Specification

4.1 Input Signal Connector

D-SUB connector

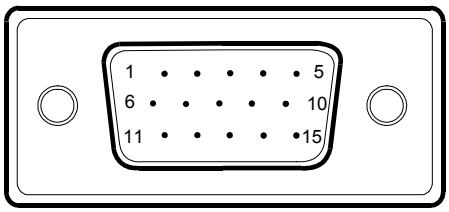

Pin No.	Description	Pin No.	Description
1.	Red	9.	+5V
2.	Green	10.	Detect Cable
3.	Blue	11.	RXD
4.	TXD	12.	DDC-Serial Data
5.	Ground	13.	H-Sync
6.	R-Ground	14.	V-Sync
7.	G-Ground	15.	DDC-Serial Clock
8.	B-Ground		

DVI connector

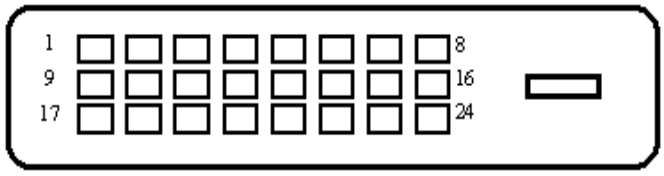

Pin No.	Signal Name	Pin No.	Signal Name	Pin No.	Signal Name
1.	TMDS Data 2-	9.	TMDS Data 1-	17.	TMDS Data 0-
2.	TMDS Data 2+	10.	TMDS Data 1+	18.	TMDS Data 0+
3.	TMDS Data 2/4 Shield	11.	TMDS Data 1/3 Shield	19.	TMDS Data 0/5 Shield
4.	TMDS Data 4-	12.	TMDS Data 3-	20.	TMDS Data 5-
5.	TMDS Data 4+	13.	TMDS Data 3+	21.	TMDS Data 5+
6.	DDC Clock	14.	+5V Power	22.	TMDS Clock Shield
7.	DDC Data	15.	Ground(for+5V)	23.	TMDS Clock +
8.	N.C.	16.	Hot Plug Detect	24.	TMDS Clock -

4.2. Factory Preset Display Modes

Standard	Resolution	Horizontal Frequency	Vertical Frequency
Dos-mode	720 × 400	31.47kHz	70Hz
VGA	640x480	31.469kHz	59.94 Hz
	640x480	37.861 kHz	72.809 Hz
	640x480	37.5 kHz	75 Hz
SVGA	800x600	35.156 kHz	56.25 Hz
	800x600	37.879 kHz	60.317 Hz
	800x600	48.077 kHz	72.188 Hz
	800x600	46.875 kHz	75 Hz
XGA	1024x768	48.363 kHz	60.004 Hz
	1024x768	56.476 kHz	70.069 Hz
	1024x768	60.023 kHz	75.029 Hz
WXGA	1152x864	67.5 kHz	75 Hz
	1440x900	55.935 kHz	59.887 Hz
	1440x900	70.635 kHz	75 Hz

4.3 Panel Specification

HannStar Display model HSD170MGW1-B00 is a color active matrix thin film transistor (TFT) liquid crystal display (LCD) that uses amorphous silicon TFT as a switching device. This model is composed of a TFT LCD panel, a driving circuit and a back light system. This TFT LCD has a 17.0 inch diagonally measured active display area with XGA resolution (900 vertical by 1440 horizontal pixel array) and can display up to 16.2M (6-bit+FRC) colors.

4.3.1 Features

_ 17.0 WXGA+ for Monitor application

_ High Resolution: 1440*900

_ 2-ch LVDS interface system

_ LCD Timing Controller

_ Wide Viewing Angle

_ RoHS compliance

4.3.2 Display Characteristics

Item		Specification
Outline Dimension		389.2 x 254.5 x 11.5 (Typ)
Display area		367.2 (H) x 229.5 (V)
Number of Pixel		1440(H) x 900(V)
Pixel pitch		0.255(H) x 0.255(V)
Pixel arrangement		RGB Vertical stripe
Display color		16.2M (6-bit+FRC)
Color Gamut		63% NTSC
Display mode		Normally white
Surface treatment		Antiglare (3H)
Weight		1400
Back-light		2-CCFLs, Top & bottom edge side
Input signal		2-ch LVDS
Power Consumption	Logic System	TBD
	B/L System	TBD

4.3.3 Electrical Characteristics

TFT LCD Module

Item	Symbol	Min.	Max.	Unit
Power supply voltage	V_{DD}	-0.3	6.0	V
Logic input voltage	V_{IN}	-0.3	VDD+0.3	V

Backlight Unit

Item	Symbol	Min.	Max.	Unit
Lamp current	I_L	3.5	9.0	mA
Lamp frequency	f_L	40	60	KHz

4.3.4 Optical Characteristics

Measuring Condition

_ Measuring surrounding: dark room

_ Lamp current IBL: 7.5±0.1mA, lamp freq. FL=50 KHz, Inverter: TDK TBD315NR-1

_ VDD=5.0V, fV=60Hz

_ Ambient temperature: 25±2oC

_ 30min. Warm-up time.

Item		Symbol	Condition	Min.	Typ.	Max.	Unit
Contrast		CR		-	600	-	
Response time	Rising	T_R		-	3	5	msec
	Falling	T_F		-	5	7	
White luminance (Center)		Y_L		-	250	-	cd/m^2
Color chromaticity (CIE1931)	Red	R_x	Θ=0 viewing angle - -		TBD		
		R_y			TBD		
	Green	G_x			TBD		
		G_y			TBD		
	Blue	B_x			TBD		
		B_y			TBD		
	White	W_x			0.310		
		W_y			0.330		
Viewing angle	Hor.	Θ_L	CR>10		(80)	-	
		Θ_R			(80)	-	
	Ver.	Θ_U			(80)	-	
		Θ_D			(80)	-	
Brightness uniformity		B_{UNI}	Θ=0	70	75	-	%

5. Block Diagram

5.1 Software Flow Chat

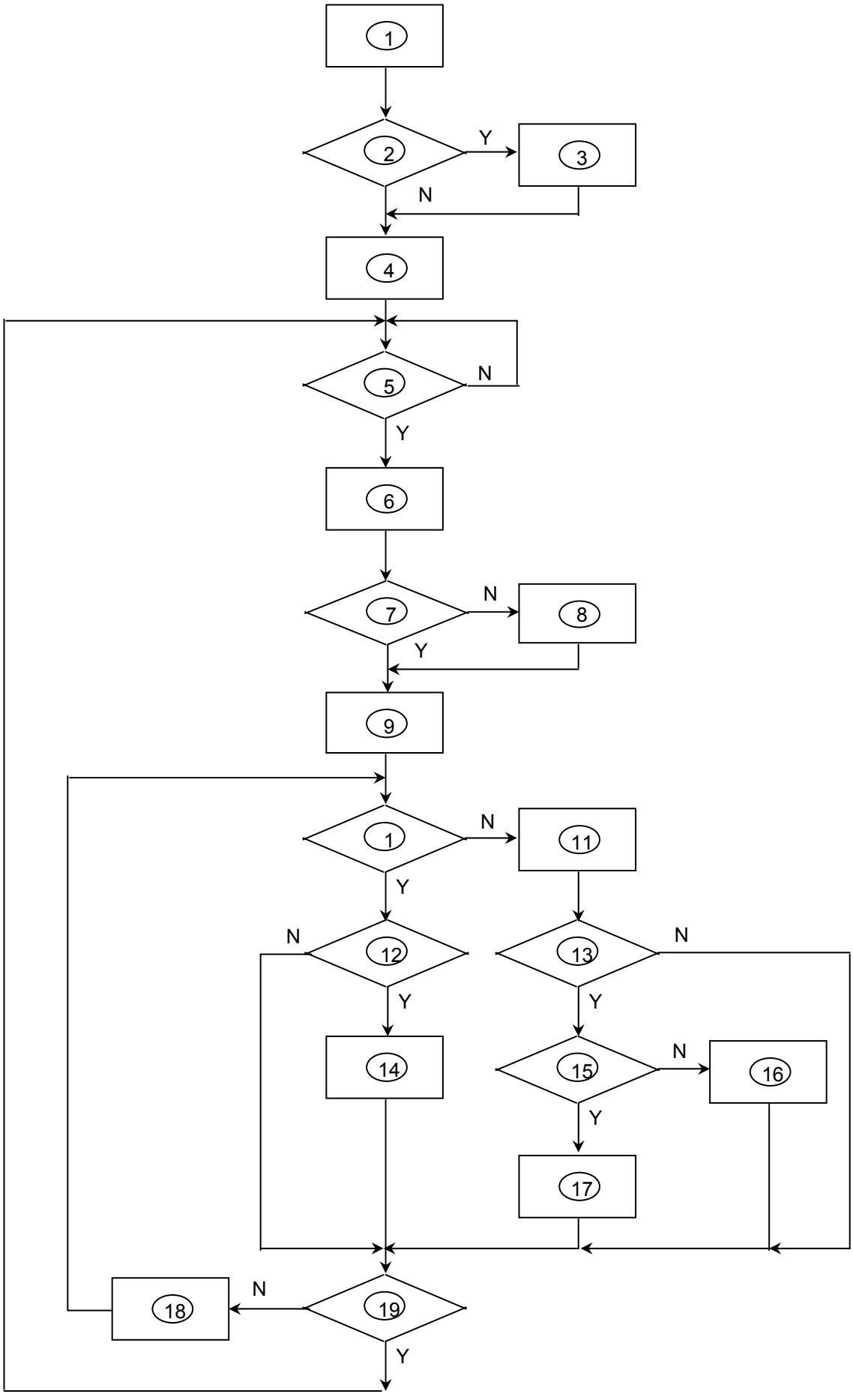

1) MCU initialize.
2) Is the EPROM blank?
3) Program the EPROM by default values.
4) Get the PWM value of brightness from EPROM.
5) Is the power key pressed?
6) Clear all global flags.
7) Are the AUTO and SELECT keys pressed?
8) Enter factory mode.
9) Save the power key status into EPROM. Turn on the LED and set it to green color. Scalar initializes.
10) In standby mode?
11) Update the lifetime of back light.
12) Check the analog port, are there any signals coming?
13) Does the scalar send out an interrupt request?
14) Wake up the scalar.
15) Are there any signals coming from analog port?
16) Display "No connection Check Signal Cable" message. And go into standby mode after the message disappear.
17) Program the scalar to be able to show the coming mode.
18) Process the OSD display.
19) Read the keyboard. Is the power key pressed?

5.2 Electrical Block Diagram

5.2.1 Main Board

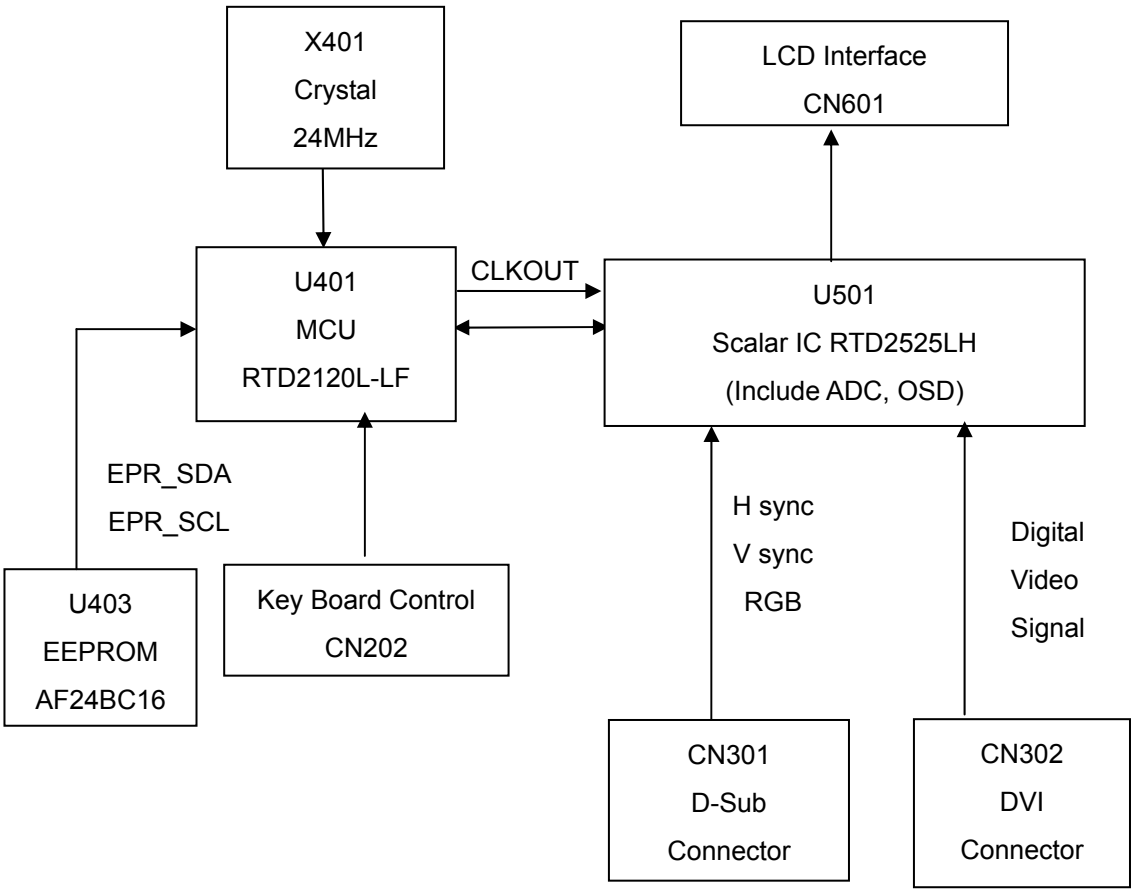

5.2.2 Inverter/Power Board

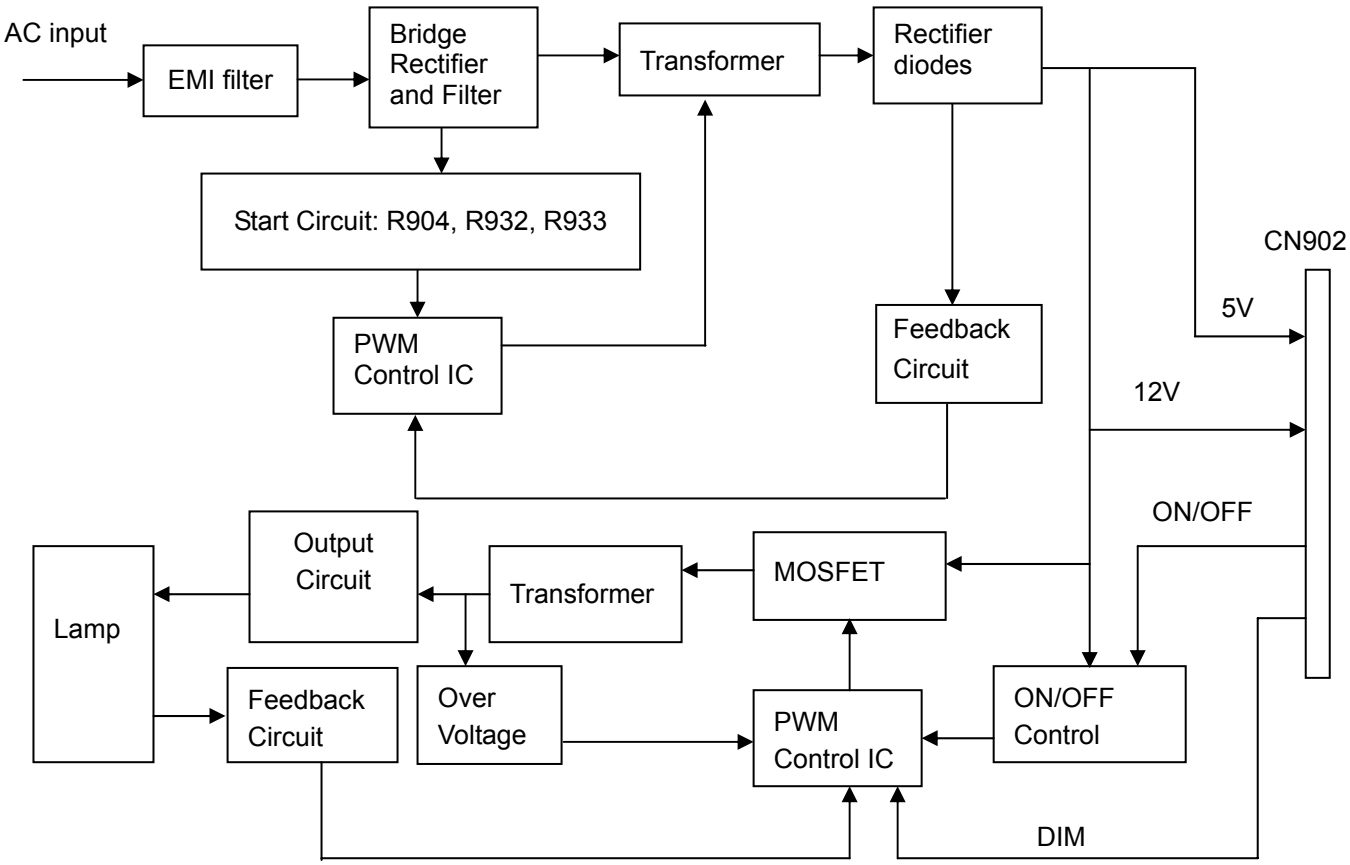

6. Schematic

6.1 Main Board

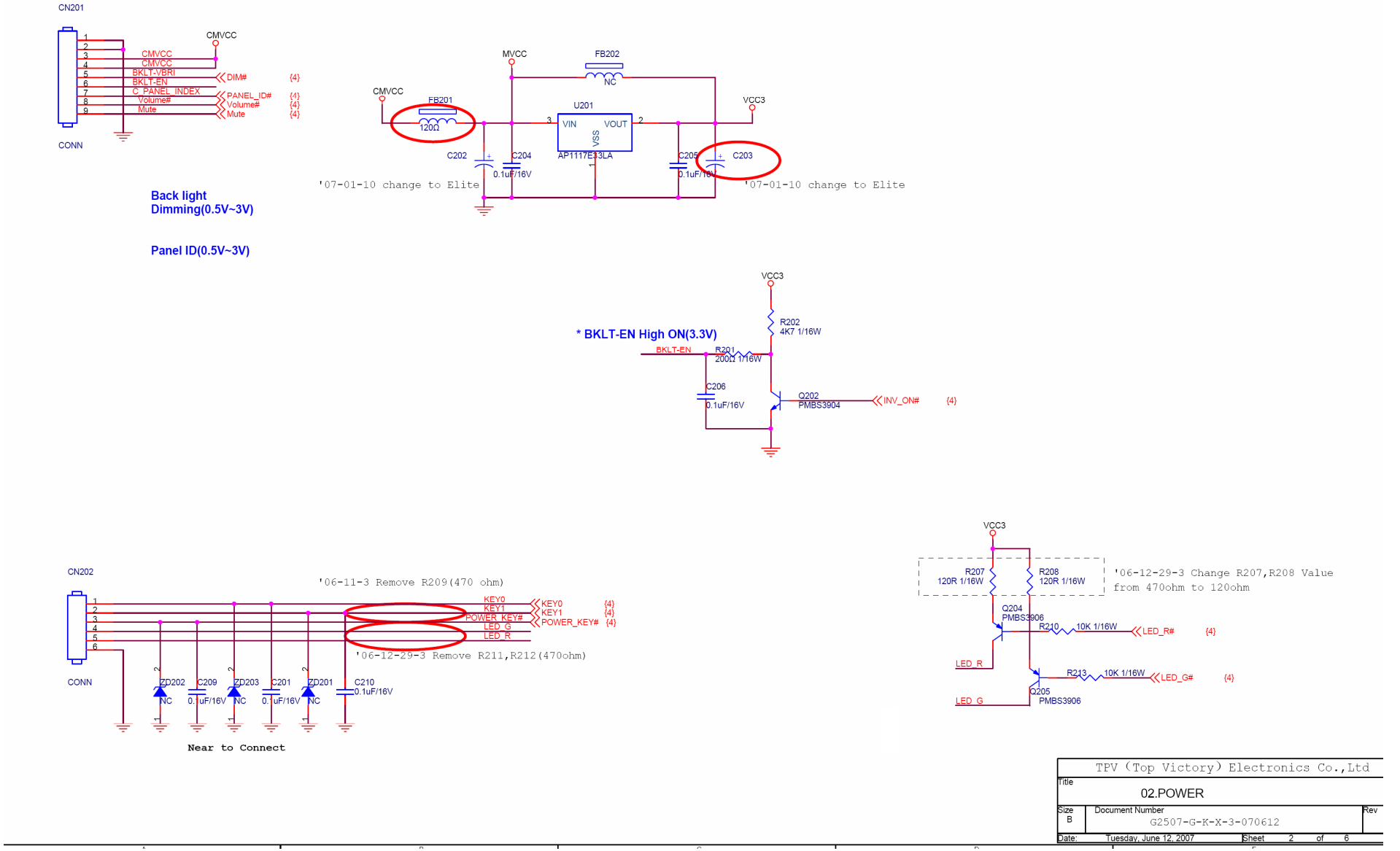

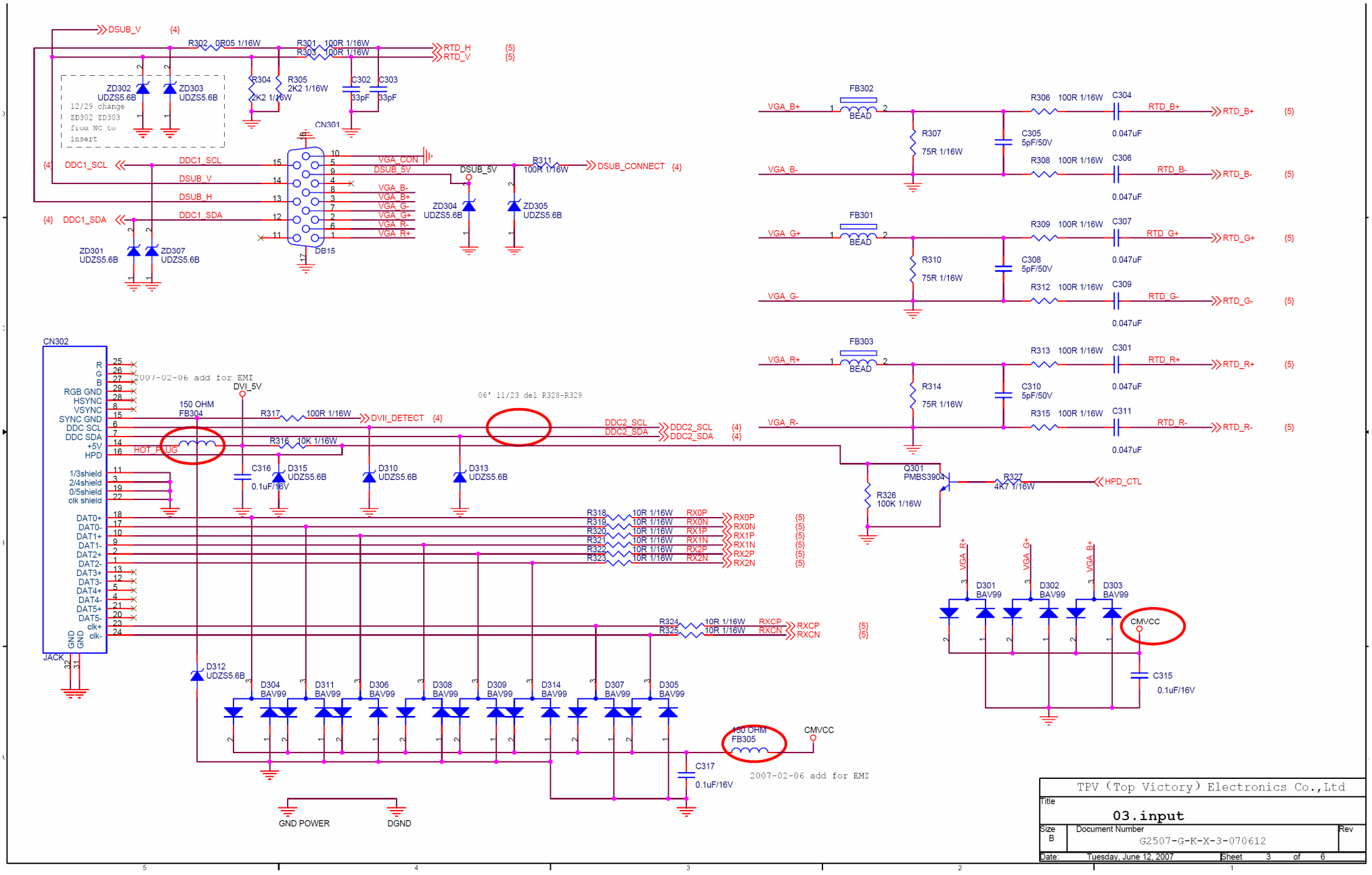
DSUB_V
R302 0R05 1/16W
R301 100R 1/16W
R303 100R 1/16W
RTD_H
RTD_V
ZD302 UDZS5.6B
ZD303 UDZS5.6B
12/29 change ZD302 ZD303 from NC to insert
R304 2K2 1/16W
R305 2K2 1/16W
C302 33pF
C303 33pF
CN301
DDC1_SCL
DDC1_SDA
DSUB_V
DSUB_H
VGA_CON
DSUB_5V
VGA_B-
VGA_B+
VGA_G-
VGA_G+
VGA_R-
VGA_R+
DB15
R311 100R 1/16W
DSUB_CONNECT
ZD304 UDZS5.6B
ZD305 UDZS5.6B
ZD301 UDZS5.6B
ZD307 UDZS5.6B
FB302
FB301
FB303
BEAD
R306 100R 1/16W
R307 75R 1/16W
R308 100R 1/16W
R309 100R 1/16W
R310 75R 1/16W
R312 100R 1/16W
R313 100R 1/16W
R314 75R 1/16W
R315 100R 1/16W
C304 0.047uF
C305 5pF/50V
C306 0.047uF
C307 0.047uF
C308 5pF/50V
C309 0.047uF
C301 0.047uF
C310 5pF/50V
C311 0.047uF
RTD_B+
RTD_B-
RTD_G+
RTD_G-
RTD_R+
RTD_R-
CN302
JACK
2007-02-06 add for EMI
DVI_5V
150 OHM FB304
R317 100R 1/16W
DVII_DETECT
HOT_PLUG
R316 10K 1/16W
C316 0.1uF/16V
D315 UDZS5.6B
D310 UDZS5.6B
D313 UDZS5.6B
06' 11/23 del R328-R329
DDC2_SCL
DDC2_SDA
Q301 PMBS3904
R326 100K 1/16W
R327 4K7 1/16W
HPD_CTL
R318 10R 1/16W
R319 10R 1/16W
R320 10R 1/16W
R321 10R 1/16W
R322 10R 1/16W
R323 10R 1/16W
RX0P
RX0N
RX1P
RX1N
RX2P
RX2N
R324 10R 1/16W
R325 10R 1/16W
RXCP
RXCN
D301 BAV99
D302 BAV99
D303 BAV99
CMVCC
C315 0.1uF/16V
D312 UDZS5.6B
D304 BAV99
D311 BAV99
D306 BAV99
D308 BAV99
D309 BAV99
D314 BAV99
D307 BAV99
D305 BAV99
150 OHM FB305
C317 0.1uF/16V
2007-02-06 add for EMI
GND POWER
DGND
TPV (Top Victory) Electronics Co.,Ltd
Title
03.input
Size B
Document Number
G2507-G-K-X-3-070612
Rev
Date: Tuesday, June 12, 2007
Sheet 3 of 6

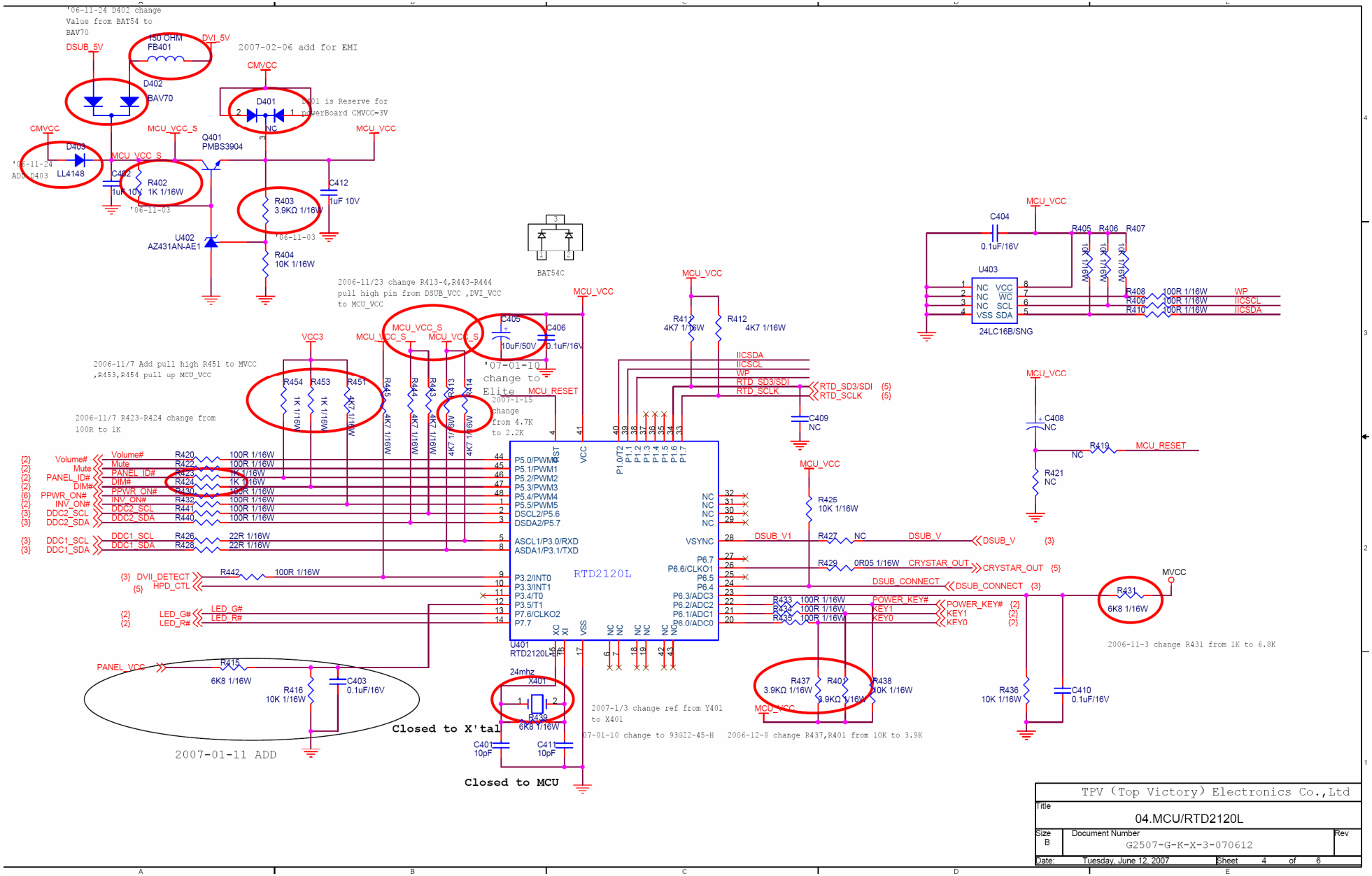
'06-11-24 D402 change Value from BAT54 to BAV70
DSUB_5V
150 OHM FB401
DVI_5V
2007-02-06 add for EMI
D402 BAV70
CMVCC
D401
D401 is Reserve for PowerBoard CMVCC=3V
MCU_VCC_S
Q401 PMBS3904
MCU_VCC
D403 LL4148
'06-11-24 ADD D403
C402 1uF 10V
R402 1K 1/16W
'06-11-03
R403 3.9KΩ 1/16W
C412 1uF 10V
U402 AZ431AN-AE1
R404 10K 1/16W
BAT54C
2006-11/23 change R413-4,R443-R444 pull high pin from DSUB_VCC ,DVI_VCC to MCU_VCC
C405 10uF/50V
C406 0.1uF/16V
'07-01-10 change to Elite
MCU_RESET
2007-1-15 change from 4.7K to 2.2K
VCC3
2006-11/7 Add pull high R451 to MVCC ,R453,R454 pull up MCU_VCC
2006-11/7 R423-R424 change from 100R to 1K
R454 1K 1/16W
R453 1K 1/16W
R451 4K7 1/16W
R445 4K7 1/16W
R444 4K7 1/16W
R443 4K7 1/16W
R413 4K7 1/16W
R414 4K7 1/16W
R411 4K7 1/16W
R412 4K7 1/16W
IICSDA
IICSCL
WP
RTD_SD3/SDI
RTD_SCLK
C409 NC
C404 0.1uF/16V
U403
24LC16B/SNG
R405 10K 1/16W
R406 10K 1/16W
R407 10K 1/16W
R408 100R 1/16W
R409 100R 1/16W
R410 100R 1/16W
C408 NC
R419 NC
R421 NC
Volume#
Mute
PANEL_ID#
DIM#
PPWR_ON#
INV_ON#
DDC2_SCL
DDC2_SDA
DDC1_SCL
DDC1_SDA
R420 100R 1/16W
R422 100R 1/16W
R423 1K 1/16W
R424 1K 1/16W
R430 100R 1/16W
R432 100R 1/16W
R441 100R 1/16W
R440 100R 1/16W
R426 22R 1/16W
R428 22R 1/16W
DVII_DETECT
HPD_CTL
R442 100R 1/16W
LED_G#
LED_R#
RTD2120L
U401 RTD2120L
P5.0/PWM0
P5.1/PWM1
P5.2/PWM2
P5.3/PWM3
P5.4/PWM4
P5.5/PWM5
DSCL2/P5.6
DSDA2/P5.7
ASCL1/P3.0/RXD
ASDA1/P3.1/TXD
P3.2/INT0
P3.3/INT1
P3.4/T0
P3.5/T1
P7.6/CLKO2
P7.7
VSYNC
P6.7
P6.6/CLKO1
P6.5
P6.4
P6.3/ADC3
P6.2/ADC2
P6.1/ADC1
P6.0/ADC0
R425 10K 1/16W
DSUB_V1
R427 NC
DSUB_V
R429 0R05 1/16W
CRYSTAR_OUT
DSUB_CONNECT
R433 100R 1/16W
R434 100R 1/16W
R435 100R 1/16W
POWER_KEY#
KEY1
KEY0
R431 6K8 1/16W
MVCC
2006-11-3 change R431 from 1K to 6.8K
PANEL_VCC
R415 6K8 1/16W
R416 10K 1/16W
C403 0.1uF/16V
2007-01-11 ADD
24mhz X401
R439 6K8 1/16W
C401 10pF
C411 10pF
Closed to X'tal
Closed to MCU
2007-1/3 change ref from Y401 to X401
07-01-10 change to 93G22-45-H
R437 3.9KΩ 1/16W
R401 3.9KΩ 1/16W
R438 10K 1/16W
2006-12-8 change R437,R401 from 10K to 3.9K
R436 10K 1/16W
C410 0.1uF/16V
TPV (Top Victory) Electronics Co.,Ltd
Title
04.MCU/RTD2120L
Size B
Document Number
G2507-G-K-X-3-070612
Rev
Date: Tuesday, June 12, 2007
Sheet 4 of 6

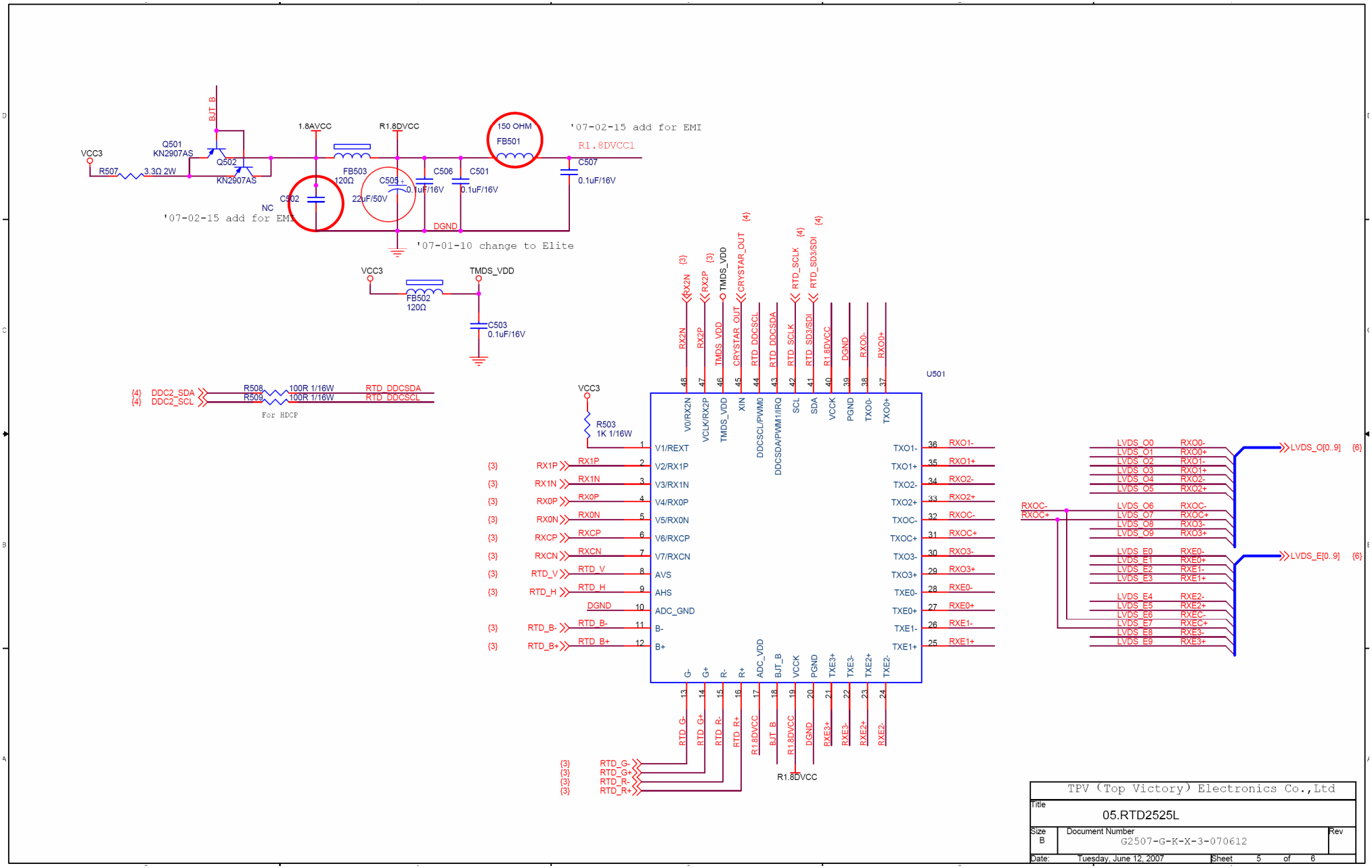
BJT_B
1.8AVCC
R1.8DVCC
150 OHM
FB501
'07-02-15 add for EMI
R1.8DVCC1
VCC3
Q501
KN2907AS
Q502
KN2907AS
R507
3.3Ω 2W
FB503
120Ω
C505
22uF/50V
0.1uF/16V
C506
0.1uF/16V
C501
0.1uF/16V
C507
0.1uF/16V
C502
NC
'07-02-15 add for EMI
DGND
'07-01-10 change to Elite
VCC3
FB502
120Ω
TMDS_VDD
C503
0.1uF/16V
{4} DDC2_SDA
{4} DDC2_SCL
R508
R509
100R 1/16W
100R 1/16W
RTD_DDCSDA
RTD_DDCSCL
For HDCP
U501
VCC3
R503
1K 1/16W
RX2N
RX2P
TMDS_VDD
CRYSTAL_OUT
RTD_DDCSCL
RTD_DDCSDA
RTD_SCLK
RTD_SD3/SDI
R1.8DVCC
DGND
RXO0-
RXO0+
V0/RX2N
VCLK/RX2P
TMDS_VDD
XIN
DDCSCL/PWM0
DDCSDA/PWM1/IRQ
SCL
SDA
VCCK
PGND
TXO0-
TXO0+
V1/REXT
V2/RX1P
V3/RX1N
V4/RX0P
V5/RX0N
V6/RXCP
V7/RXCN
AVS
AHS
ADC_GND
B-
B+
TXO1-
TXO1+
TXO2-
TXO2+
TXOC-
TXOC+
TXO3-
TXO3+
TXE0-
TXE0+
TXE1-
TXE1+
RXO1-
RXO1+
RXO2-
RXO2+
RXOC-
RXOC+
RXO3-
RXO3+
RXE0-
RXE0+
RXE1-
RXE1+
RX1P
RX1N
RX0P
RX0N
RXCP
RXCN
RTD_V
RTD_H
RTD_B-
RTD_B+
G-
G+
R-
R+
ADC_VDD
BJT_B
VCCK
PGND
TXE3+
TXE3-
TXE2+
TXE2-
RTD_G-
RTD_G+
RTD_R-
RTD_R+
R1.8DVCC
BJT_B
DGND
RXE3+
RXE3-
RXE2+
RXE2-
LVDS_O0
LVDS_O1
LVDS_O2
LVDS_O3
LVDS_O4
LVDS_O5
LVDS_O6
LVDS_O7
LVDS_O8
LVDS_O9
LVDS_O[0..9]
{6}
LVDS_E0
LVDS_E1
LVDS_E2
LVDS_E3
LVDS_E4
LVDS_E5
LVDS_E6
LVDS_E7
LVDS_E8
LVDS_E9
LVDS_E[0..9]
{6}
TPV (Top Victory) Electronics Co.,Ltd
Title
05.RTD2525L
Size B
Document Number
G2507-G-K-X-3-070612
Rev
Date: Tuesday, June 12, 2007
Sheet 5 of 6

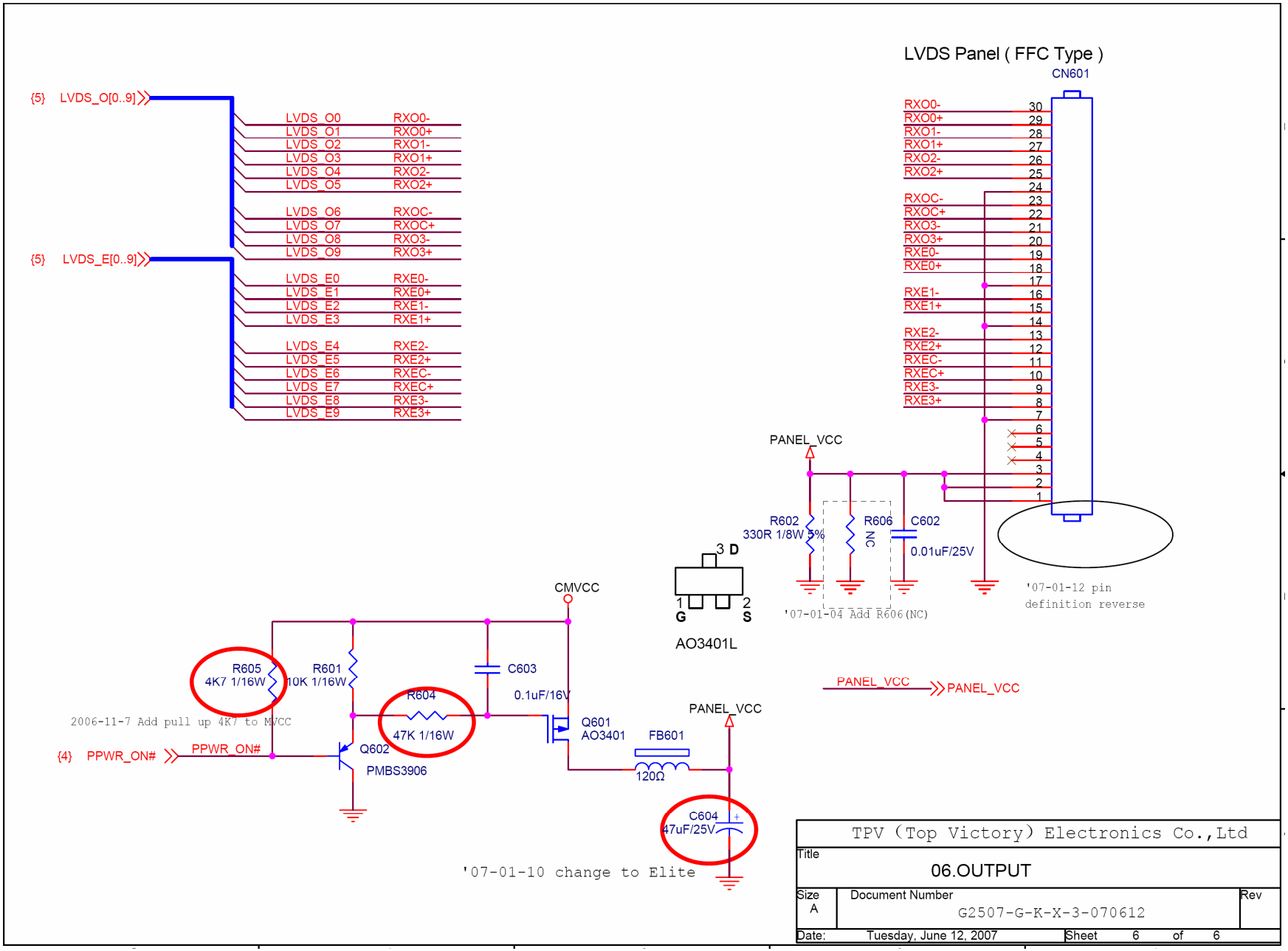
LVDS Panel (FFC Type)
CN601
{5} LVDS_O[0..9]
{5} LVDS_E[0..9]
LVDS_O0 RXO0-
LVDS_O1 RXO0+
LVDS_O2 RXO1-
LVDS_O3 RXO1+
LVDS_O4 RXO2-
LVDS_O5 RXO2+
LVDS_O6 RXOC-
LVDS_O7 RXOC+
LVDS_O8 RXO3-
LVDS_O9 RXO3+
LVDS_E0 RXE0-
LVDS_E1 RXE0+
LVDS_E2 RXE1-
LVDS_E3 RXE1+
LVDS_E4 RXE2-
LVDS_E5 RXE2+
LVDS_E6 RXEC-
LVDS_E7 RXEC+
LVDS_E8 RXE3-
LVDS_E9 RXE3+
RXO0- 30
RXO0+ 29
RXO1- 28
RXO1+ 27
RXO2- 26
RXO2+ 25
24
RXOC- 23
RXOC+ 22
RXO3- 21
RXO3+ 20
RXE0- 19
RXE0+ 18
17
RXE1- 16
RXE1+ 15
14
RXE2- 13
RXE2+ 12
RXEC- 11
RXEC+ 10
RXE3- 9
RXE3+ 8
7
6
5
4
3
2
1
PANEL_VCC
R602 330R 1/8W 5%
R606 NC
C602 0.01uF/25V
'07-01-12 pin definition reverse
'07-01-04 Add R606(NC)
3 D
1 G
2 S
AO3401L
CMVCC
R605 4K7 1/16W
R601 10K 1/16W
R604 47K 1/16W
C603 0.1uF/16V
2006-11-7 Add pull up 4K7 to MVCC
{4} PPWR_ON#
PPWR_ON#
Q602 PMBS3906
Q601 AO3401
FB601 120Ω
PANEL_VCC
C604 47uF/25V
'07-01-10 change to Elite
PANEL_VCC PANEL_VCC
TPV (Top Victory) Electronics Co.,Ltd
Title 06.OUTPUT
Size A
Document Number G2507-G-K-X-3-070612
Rev
Date: Tuesday, June 12, 2007
Sheet 6 of 6

6.2 Power Board

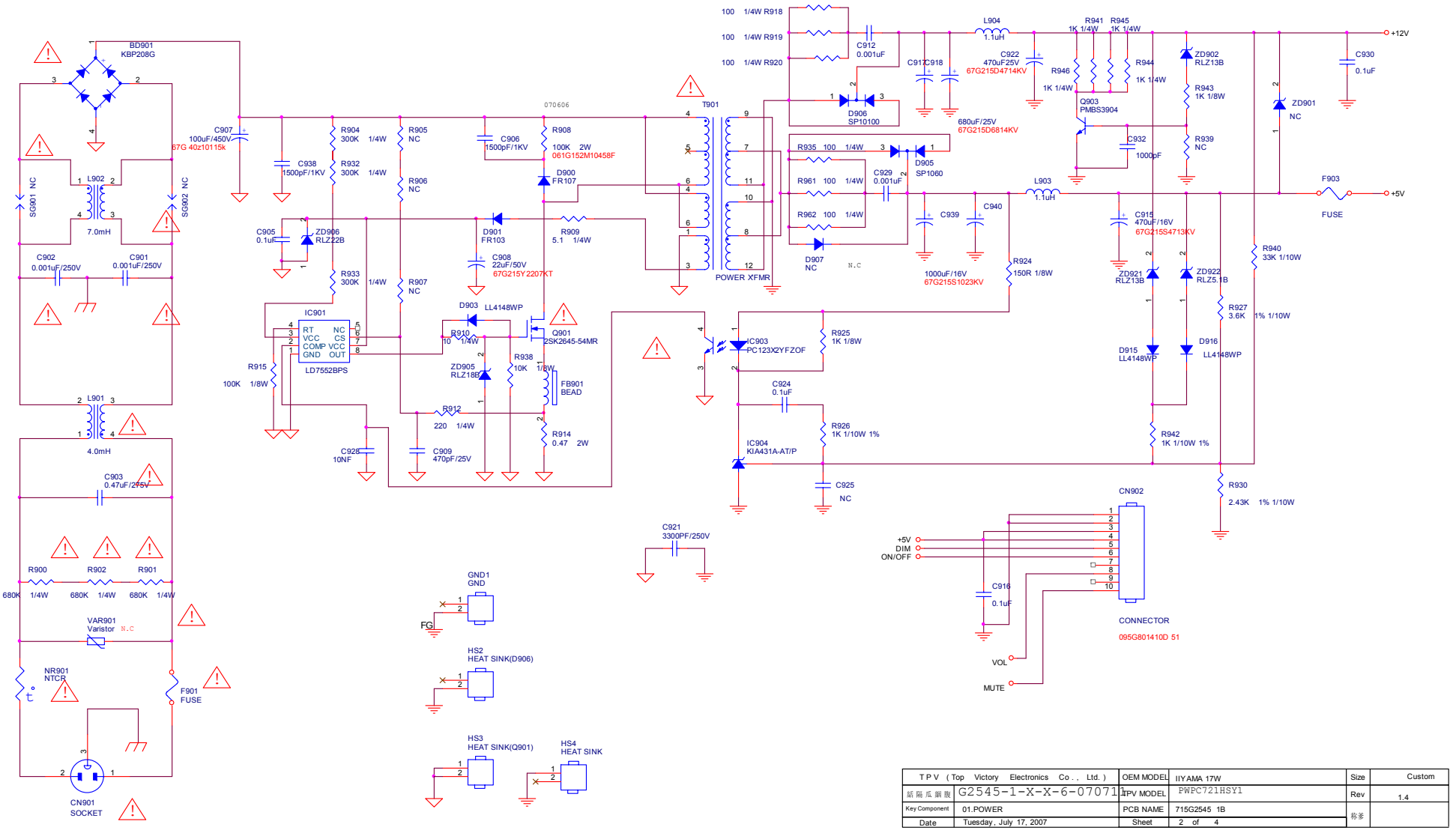

T P V (Top Victory Electronics Co., Ltd.)		OEM MODEL	IIYAMA 17W	Size	Custom
結陽瓜銅股	G2545-1-X-X-6-070711	TPV MODEL	PWPC721HSY1	Rev	1.4
Key Component	01.POWER	PCB NAME	715G2545 1B	標準	
Date	Tuesday, July 17, 2007	Sheet	2 of 4		

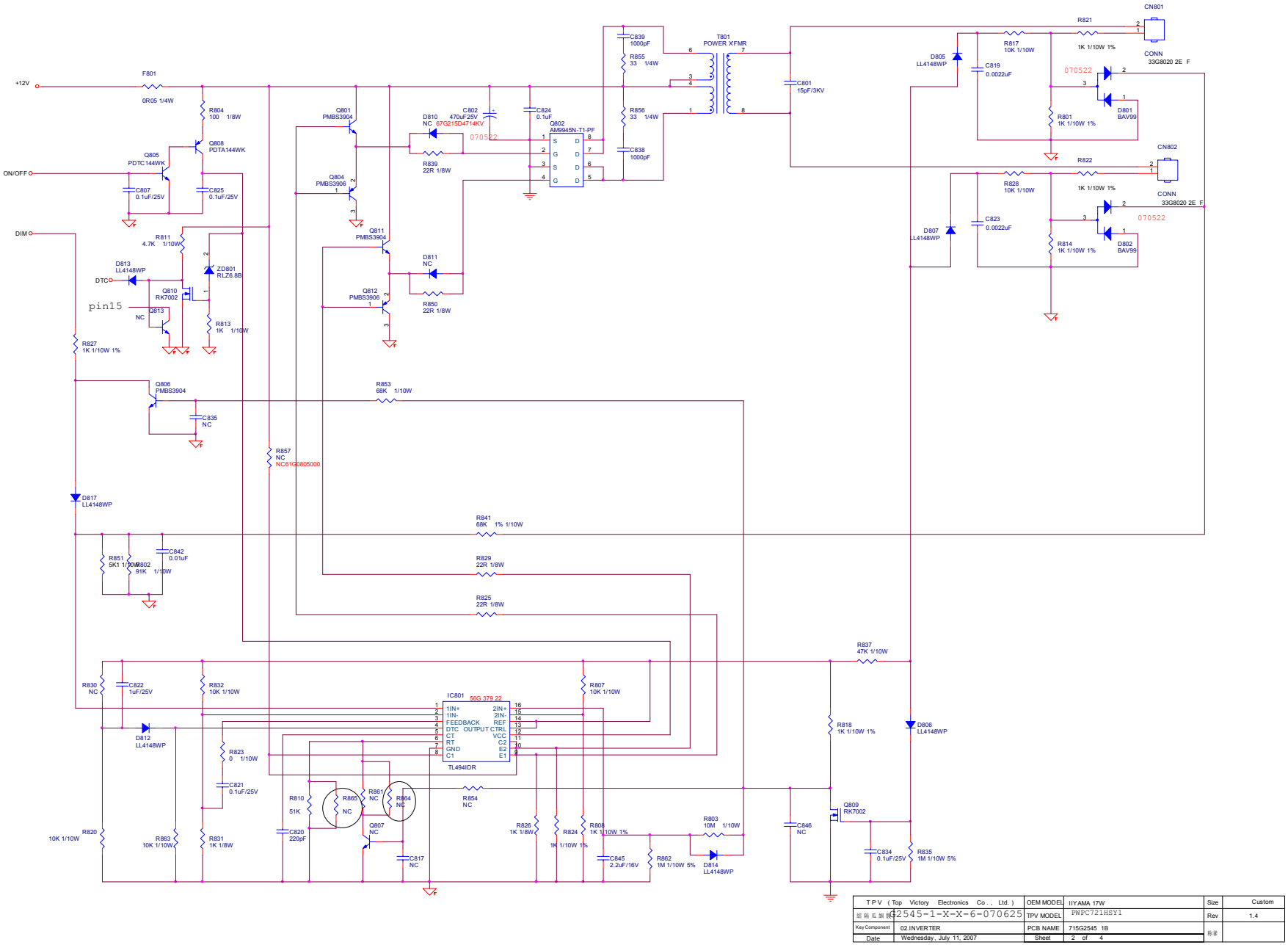

T P V (Top Victory Electronics Co., Ltd.)		OEM MODEL	IIYAMA 17W	Size	Custom
結隔瓜鋼製	G2545-1-X-X-6-070625	TPV MODEL	PWPC721HSY1	Rev	1.4
Key Component	02.INVERTER	PCB NAME	715G2545 1B	称参	
Date	Wednesday, July 11, 2007	Sheet	2 of 4		

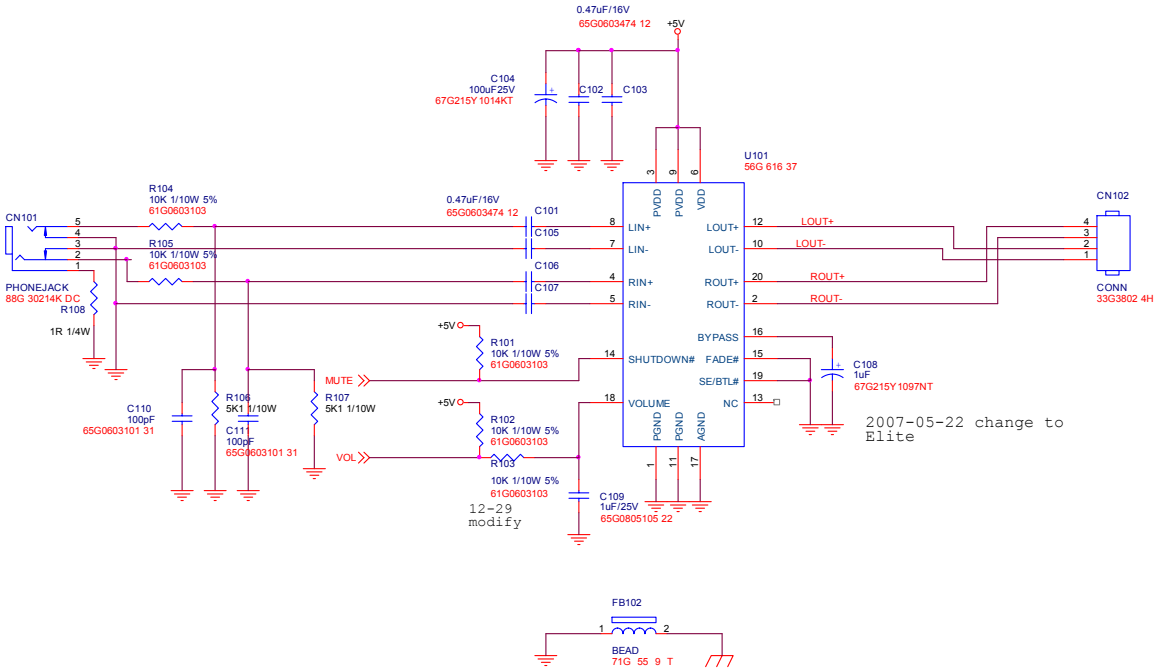

TPV (Top Victory Electronics Co., Ltd.)		OEM MODEL	IIYAMA 17W	Size	Custom
話隔瓜網腹	G2545-1-X-X-6-07062	TPV MODEL	PWPC721HSY1	Rev	1.4
Key Component	03.AUDIO	PCB NAME	715G2545 1B	称爹	
Date	Wednesday, July 11, 2007	Sheet	4 of 4		

7. PCB Layout

7.1 Main Board

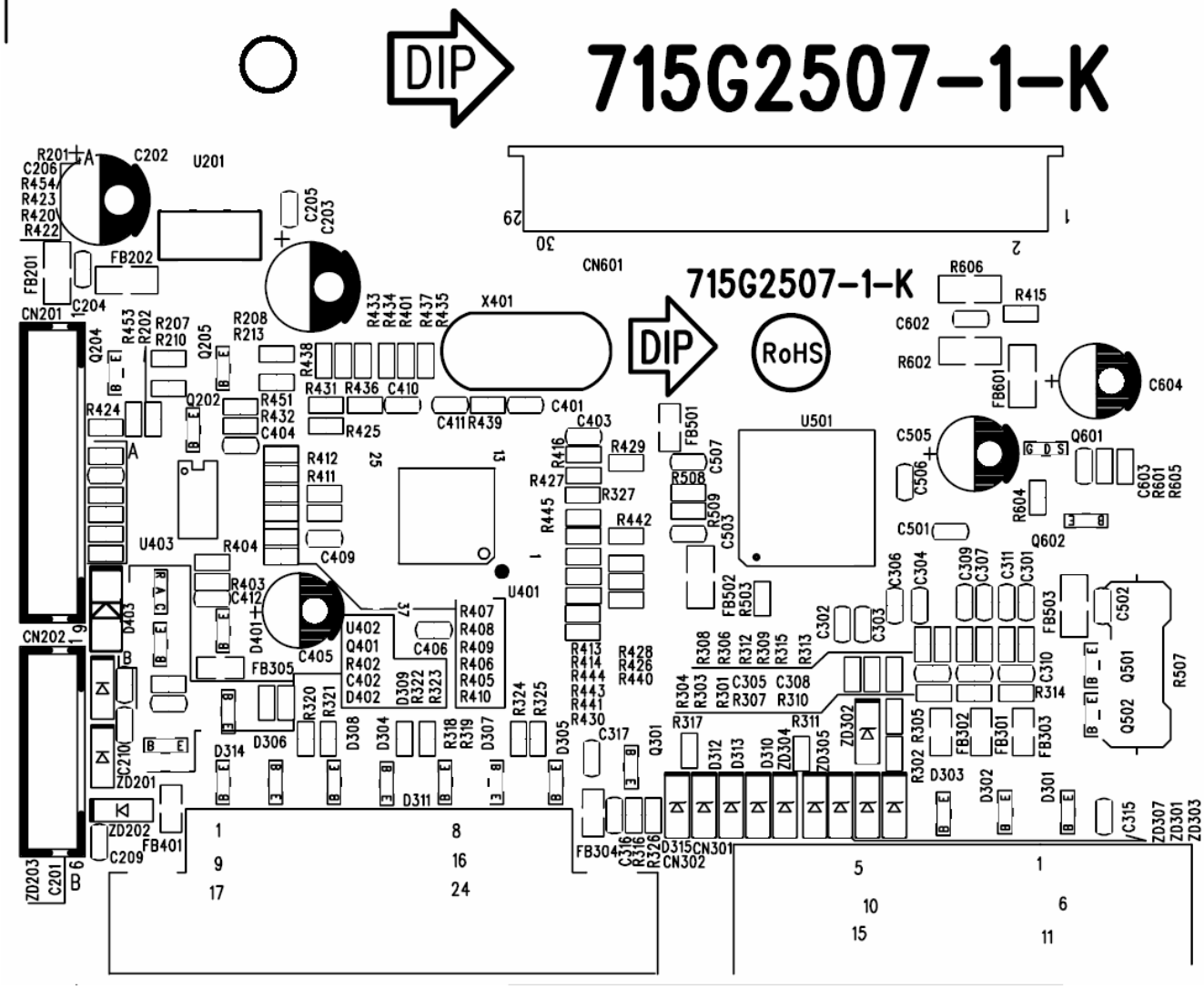

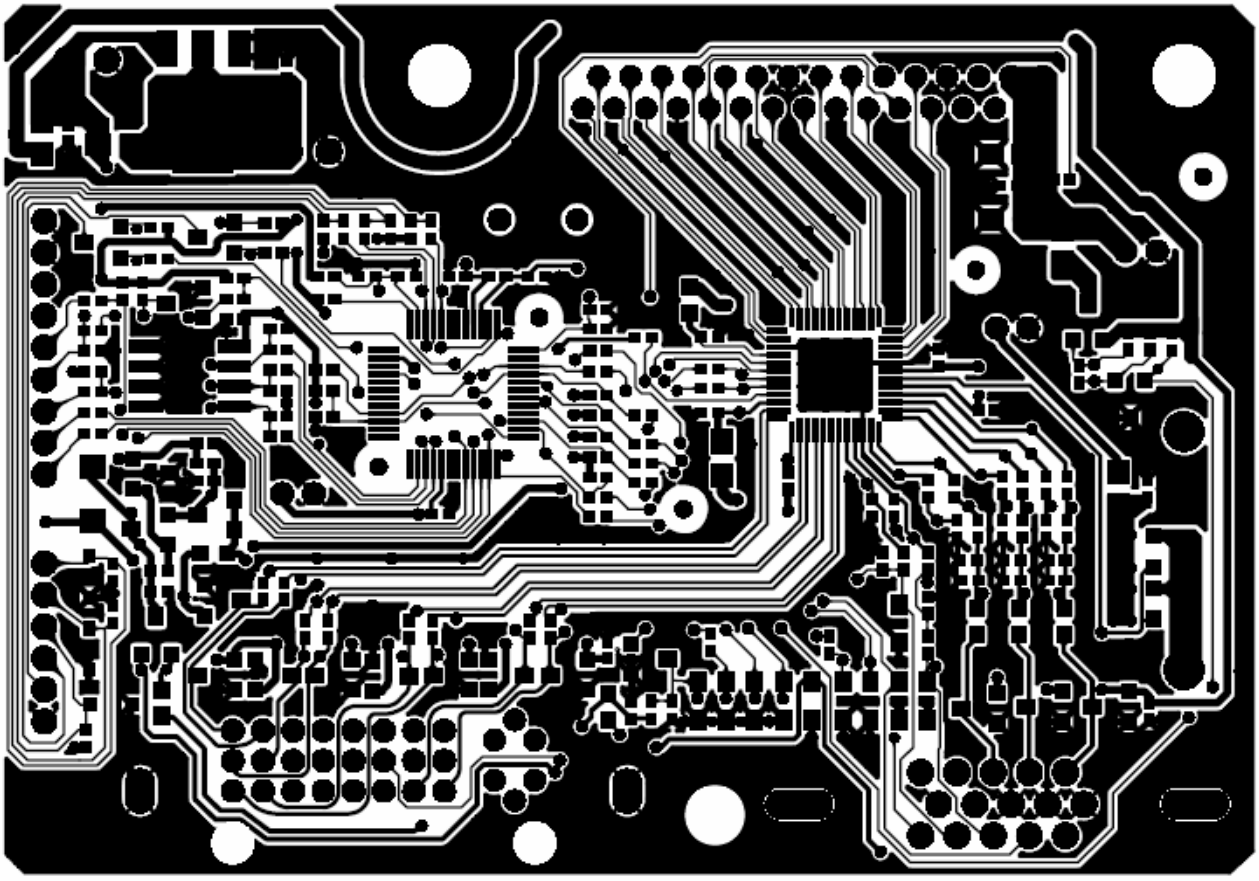

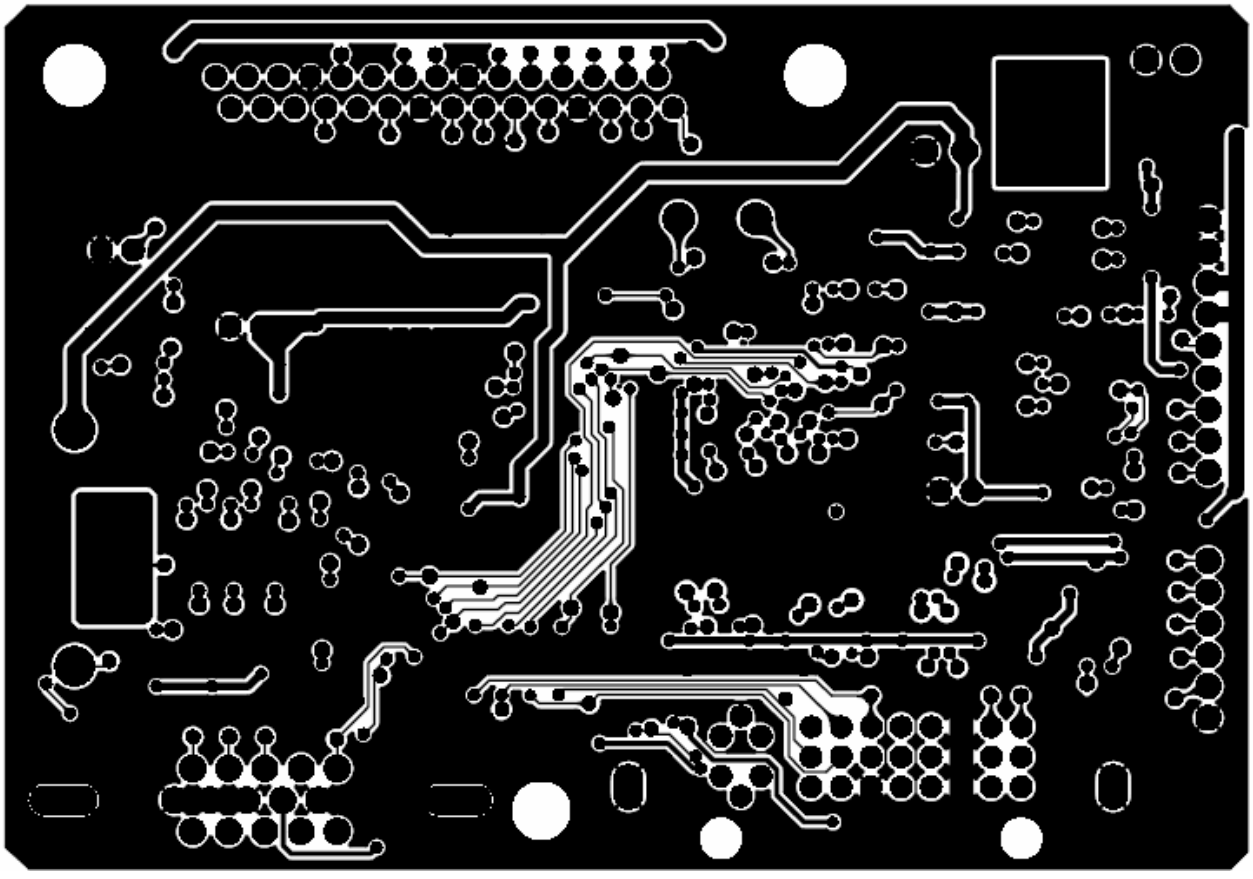

7.2 Power Board

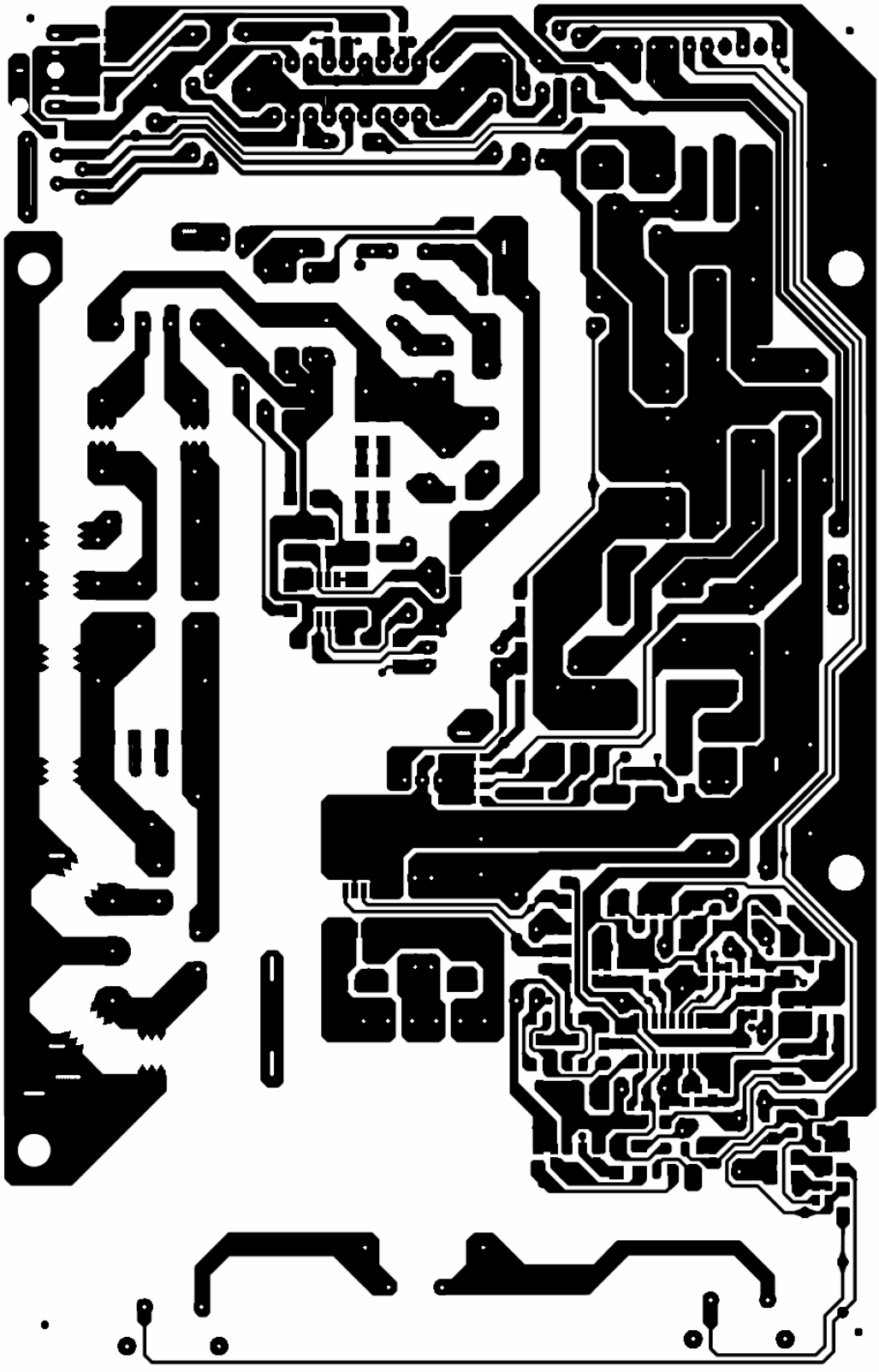

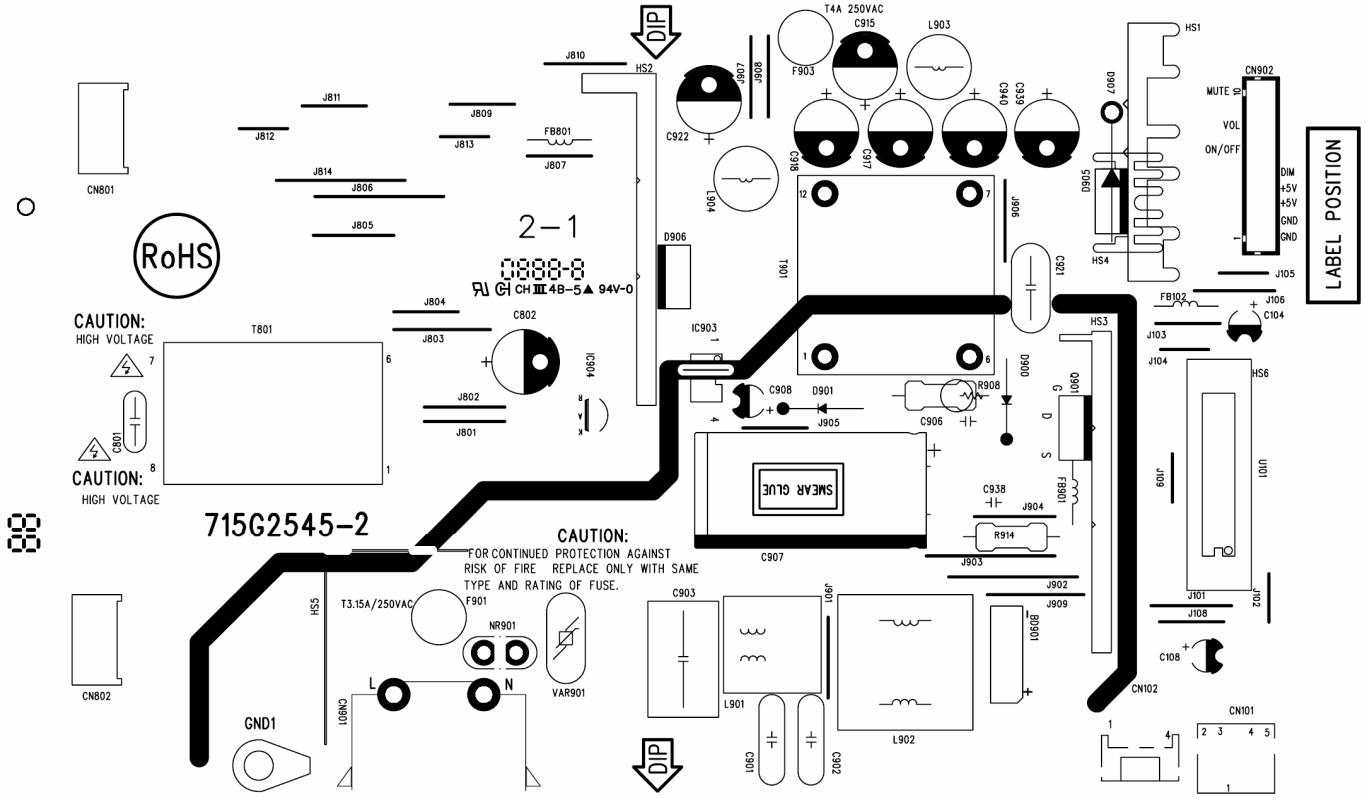
RoHS
2-1
CAUTION:
HIGH VOLTAGE
CAUTION:
HIGH VOLTAGE
715G2545-2
CAUTION:
FOR CONTINUED PROTECTION AGAINST
RISK OF FIRE REPLACE ONLY WITH SAME
TYPE AND RATING OF FUSE.
T3.15A/250VAC
T4A 250VAC
SWEAR GLUE
LABEL POSITION
MUTE
VOL
ON/OFF
DIM
+5V
+5V
GND
GND
DIP
GND1
CN801
CN802
CN901
CN902
CN101
CN102
T801
L901
L902
L903
L904
F901
F903
NR901
VAR901
IC903
IC904

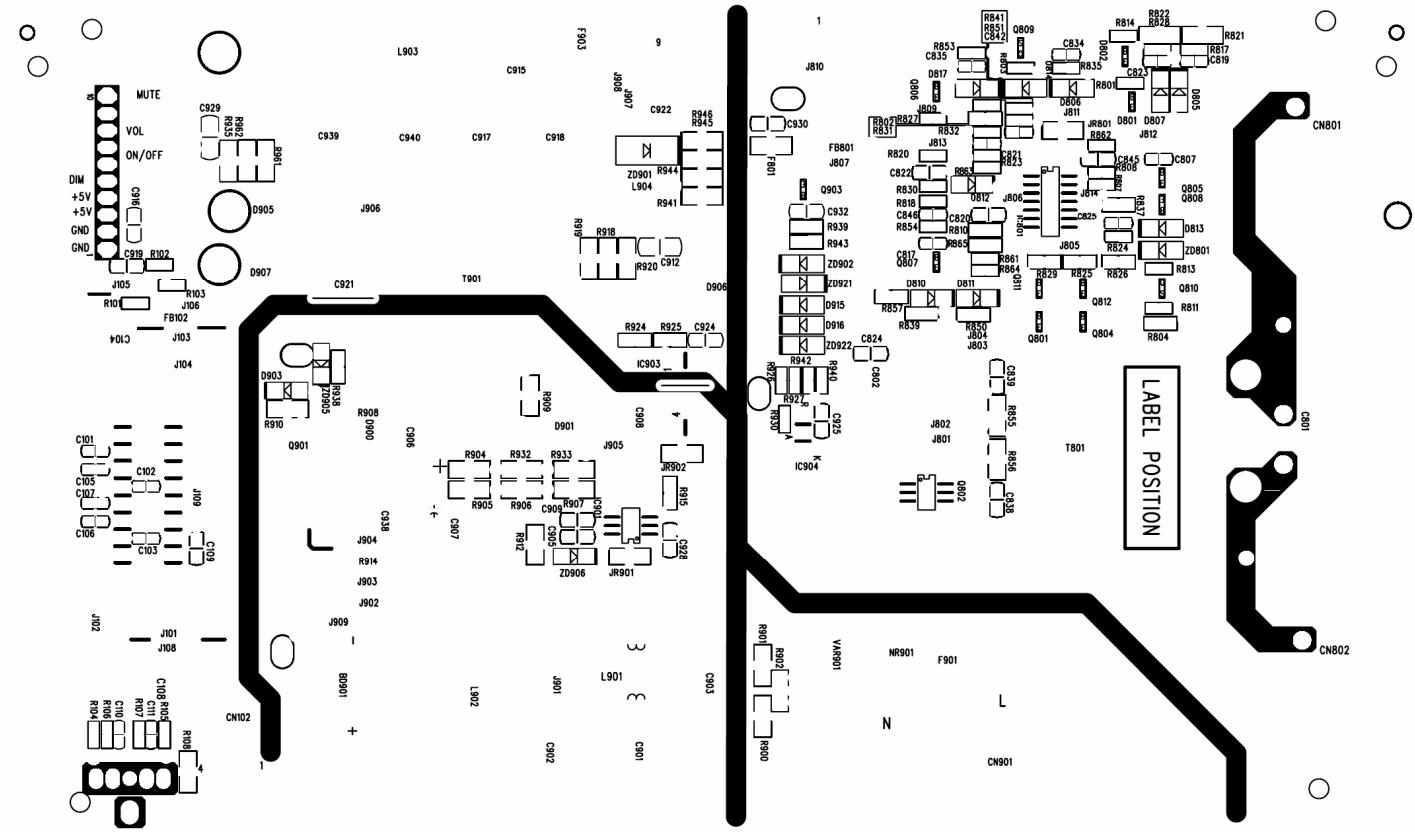
MUTE
VOL
ON/OFF
DIM
+5V
+5V
GND
GND
LABEL POSITION
CN801
CN802
CN901
CN102
T801
L901
L903
F901
NR901
VAR901
IC903
IC904

7.3 Key Board

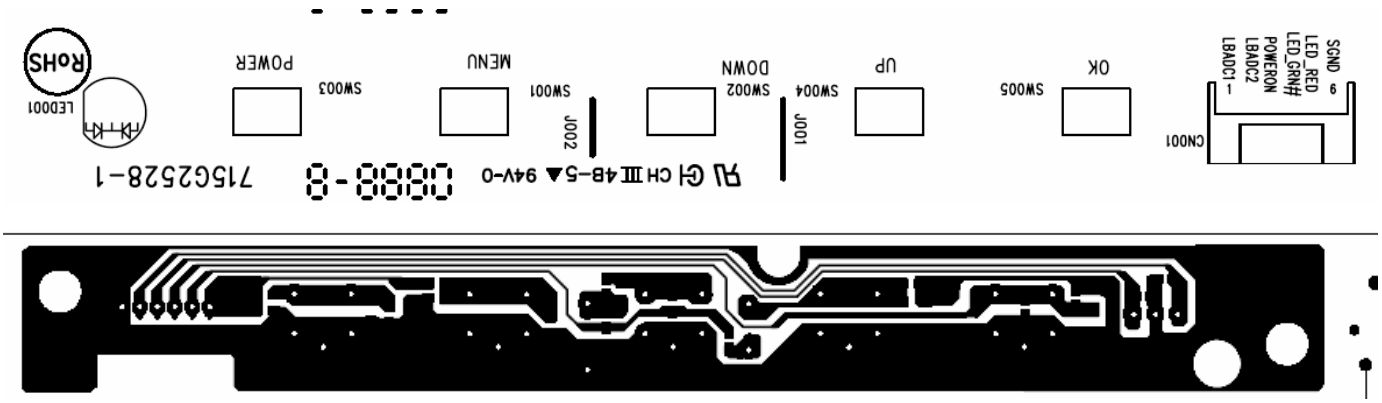
RoHS
LED001
POWER
SW003
MENU
SW001
J002
DOWN
SW002
SW004
J001
UP
OK
SW005
CN001
LBADC1
LBADC2
POWERON
LED_GRN#
LED_RED
SGND
715G2528-1

8. Maintainability

8.1 Equipments and Tools Requirement

1. Voltmeter.
2. Oscilloscope.
3. Pattern Generator.
4. DDC Tool with and Compatible Computer.
5. Alignment Tool.
6. LCD Color Analyzer.
7. Service Manual.
8. User Manual.

8.2 Trouble Shooting

8.2.1 Main Board

No power

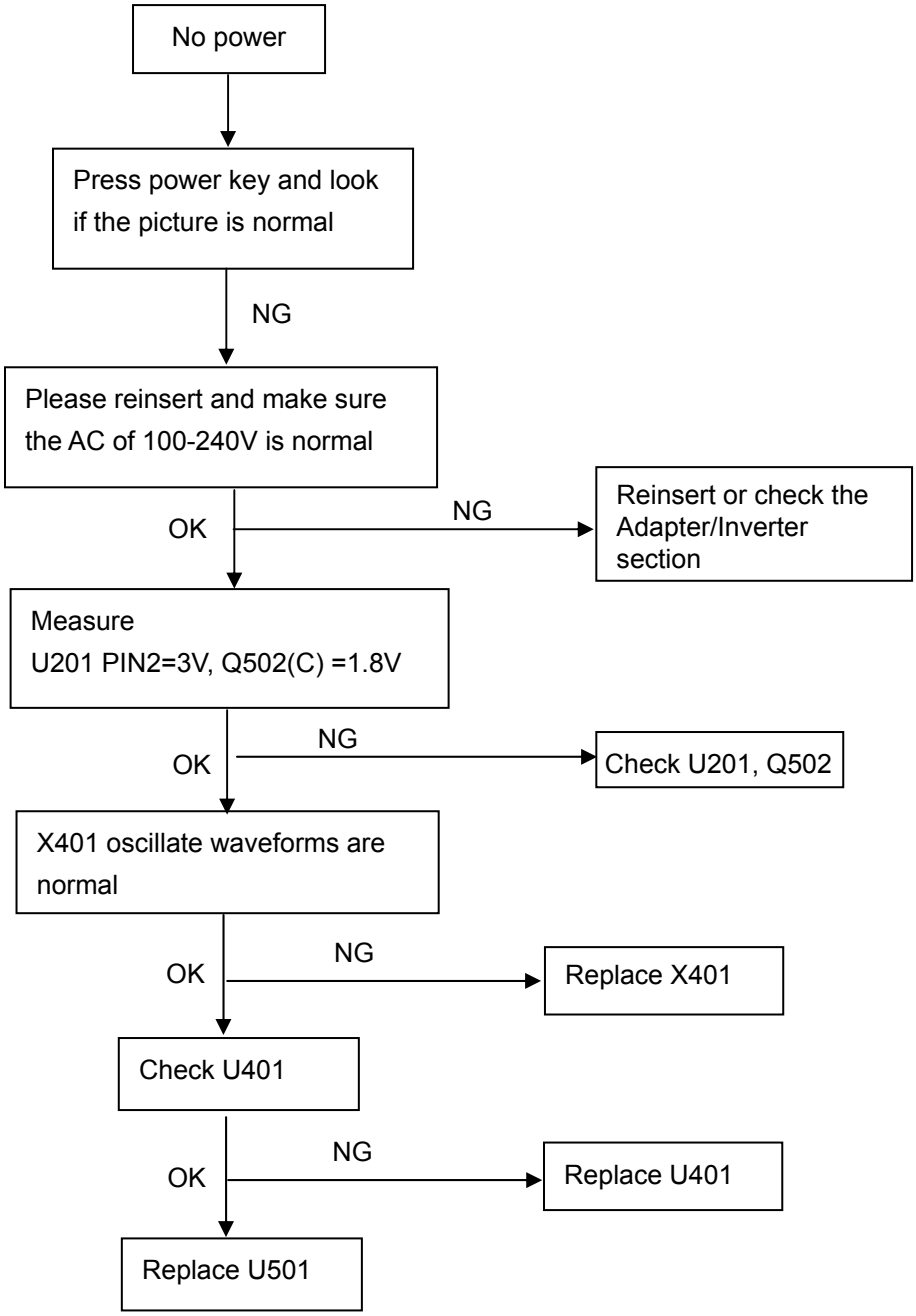

No picture (LED orange)

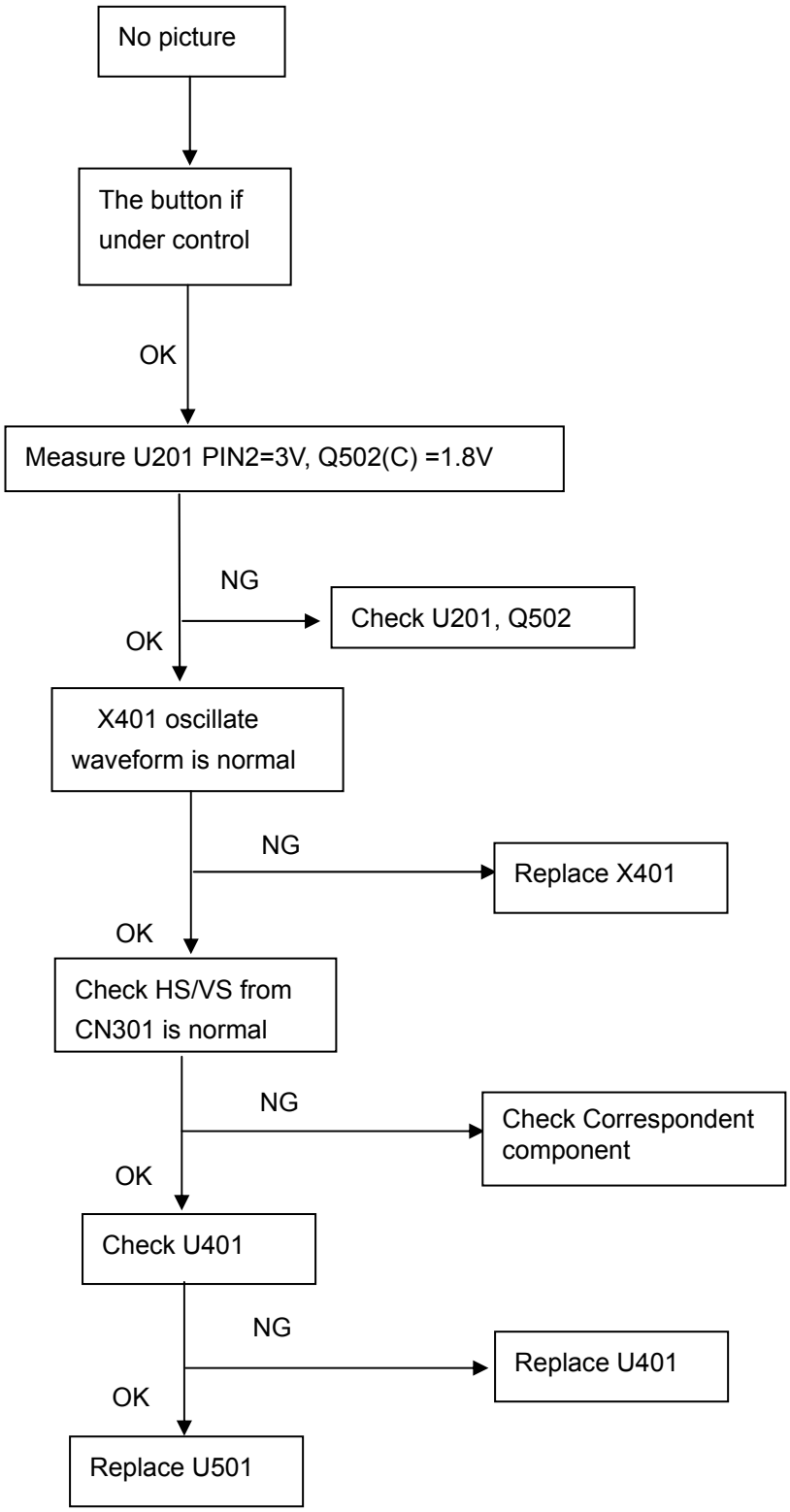

White screen

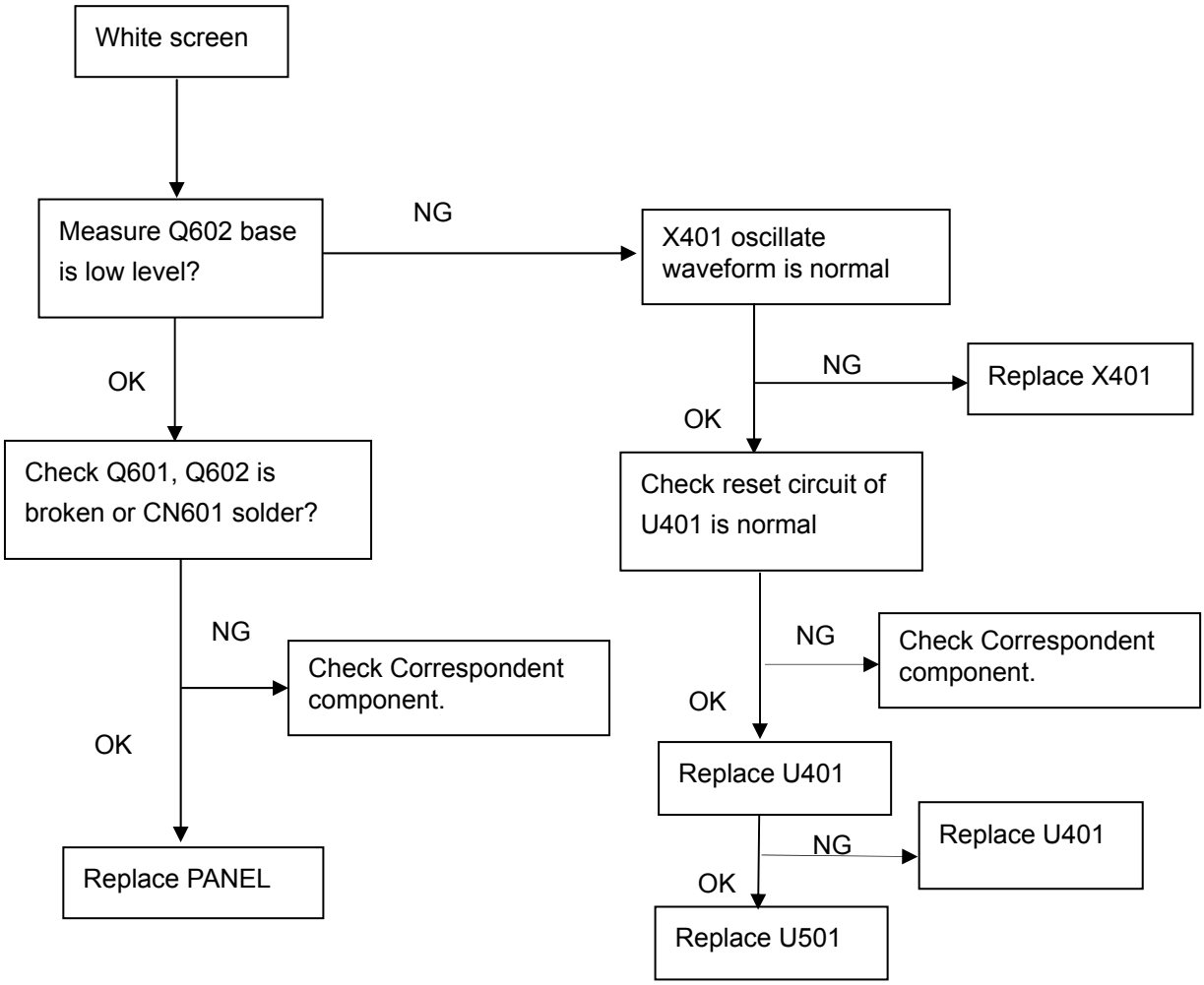

8.2.2 Power/Inverter Board

(1) No power

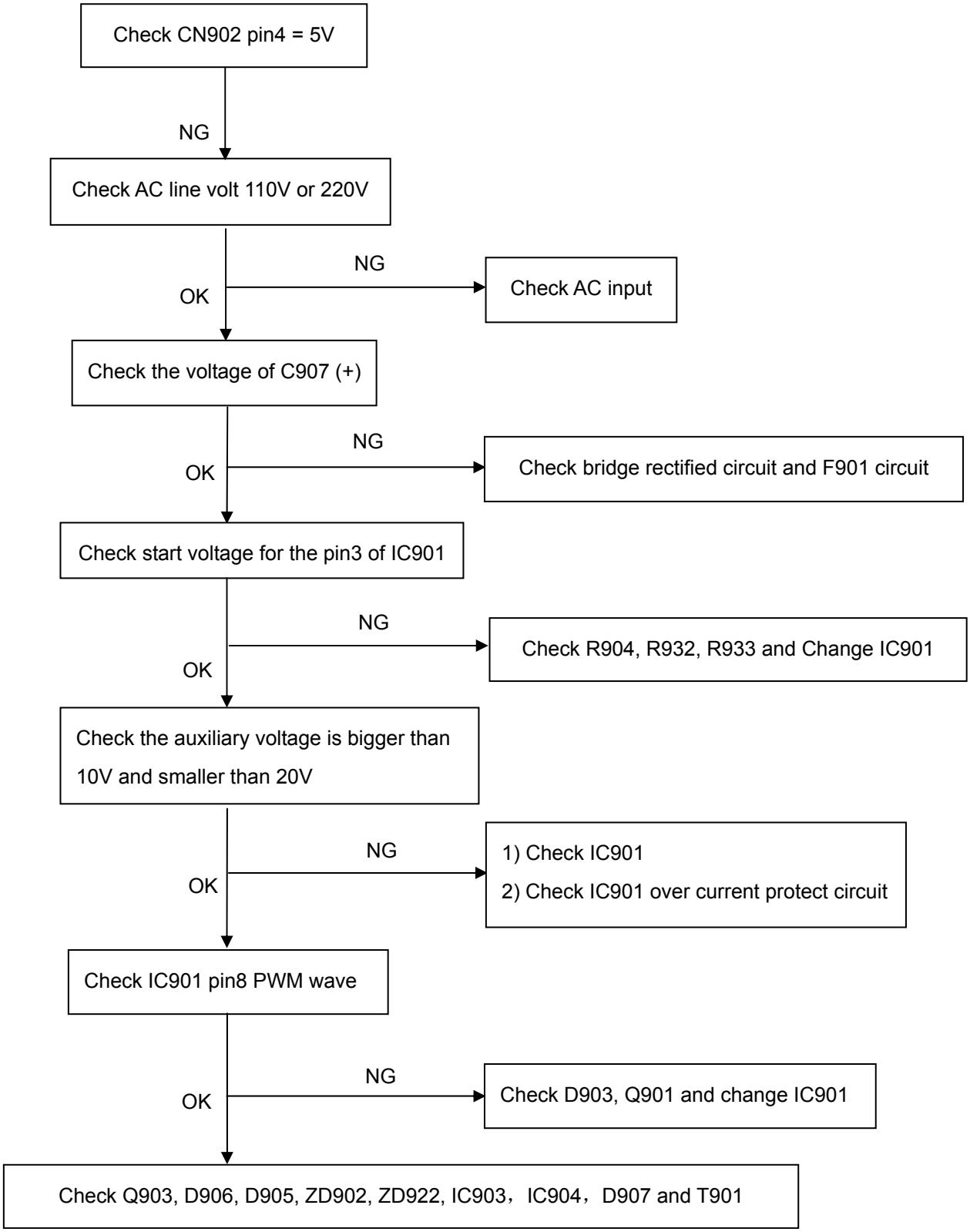

2.) W / LED, No Backlight

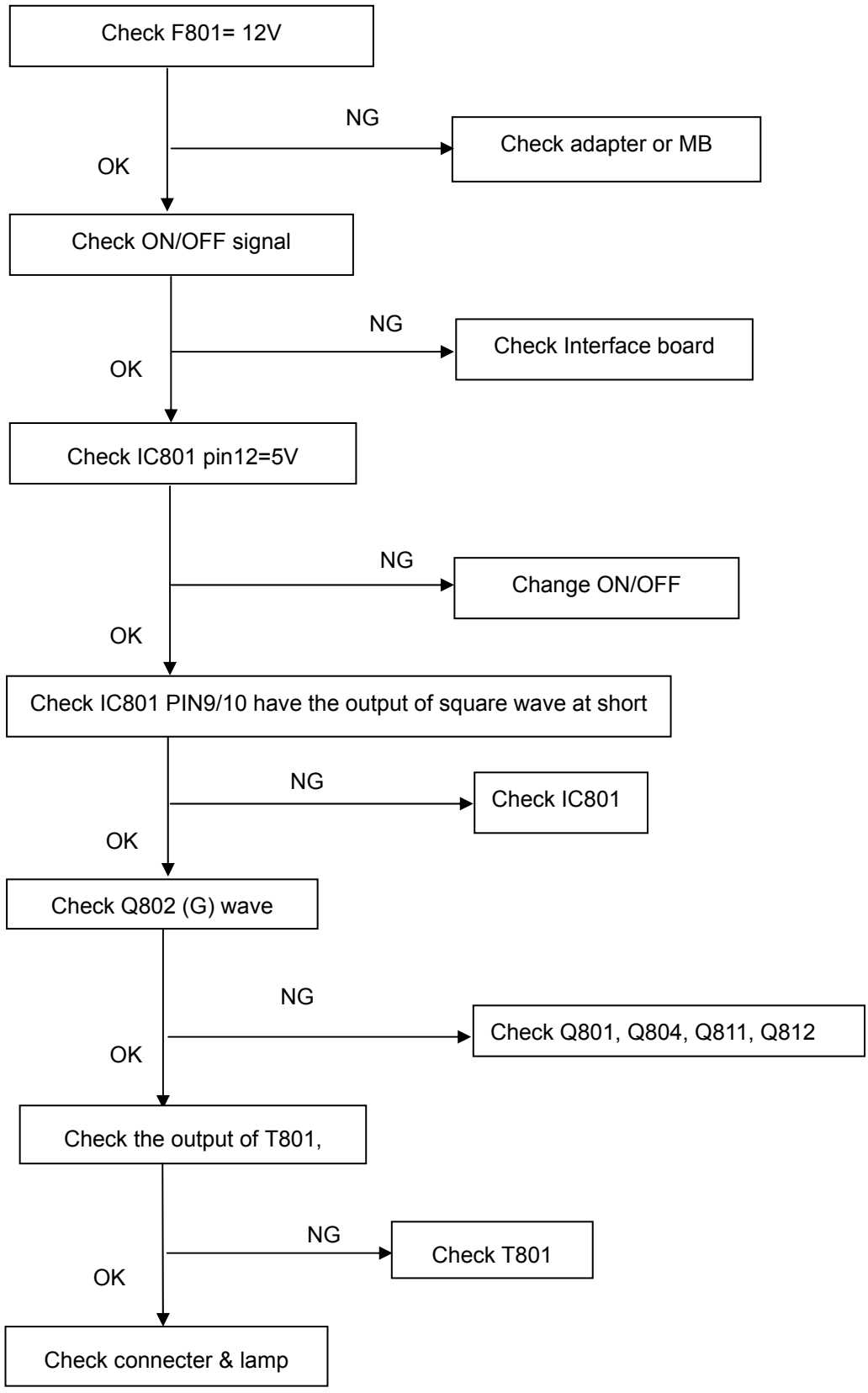

8.2.3 Key Board

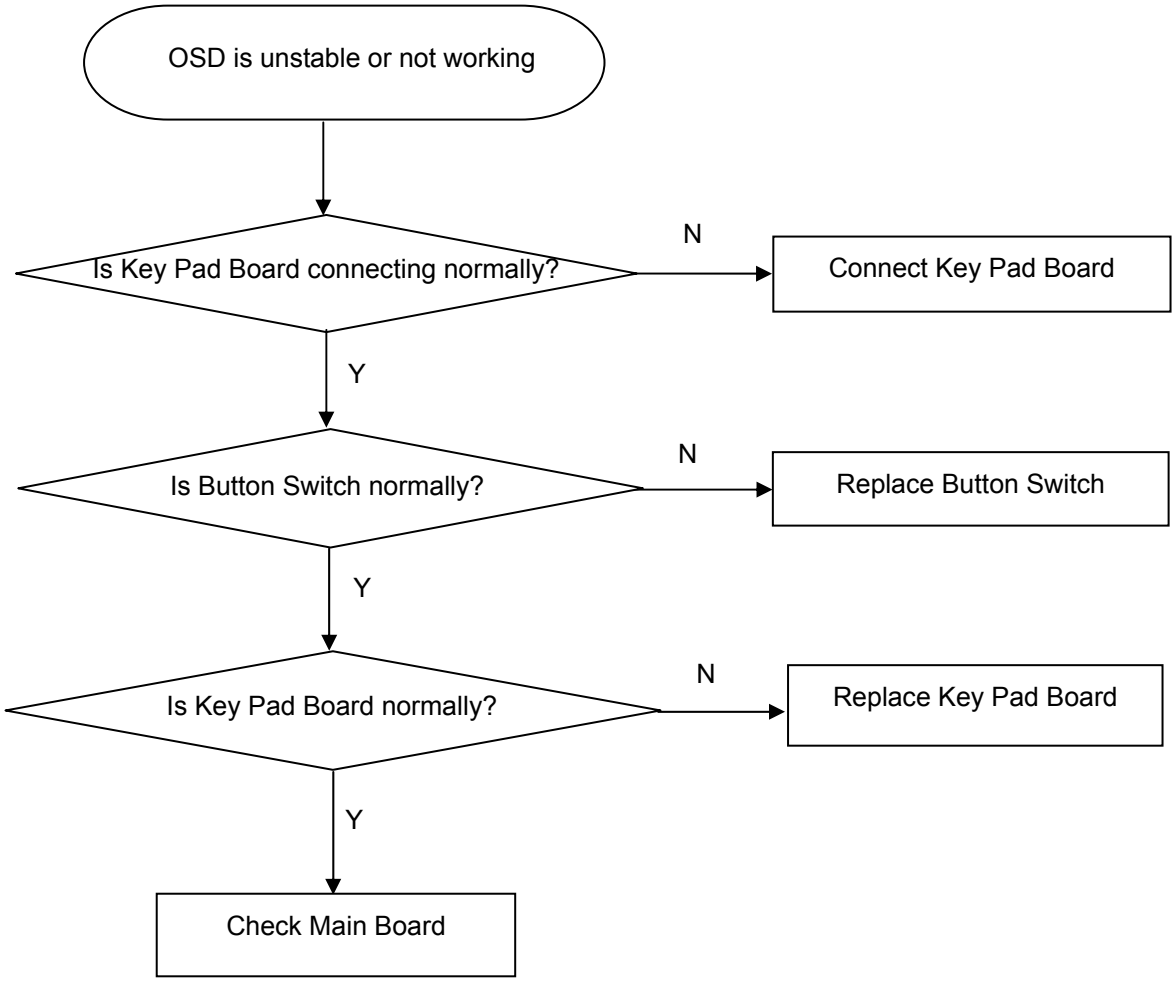

9. White- Balance, Luminance Adjustment

Approximately 30 minutes should be allowed for warm up before proceeding white balance adjustment.
Before started adjust white balance , please set the Chroma-7120 MEM Channel 3 to Warm (6500K) color, MEM Channel 4 to Normal (7300K) color, MEM Channel 9 to Cool (9300K) color , and MEM Channel 10 to sRGB color (our Warm color parameter is x = 313 ±25, y = 329 ±25, Y=180cd/m^2; Normal color parameter is x = 301 ±25, y = 317 ±25, Y=180cd/m^2; Cool color parameter is x = 283 ±25, y = 297 ±25, Y=180cd/m^2; sRGB color parameter is x = 313 ±25, y = 329 ±25, Y= 180cd/m^2)
How to setting MEM channel you can reference to chroma 7120 user guide or simple use " SC" key and " NEXT" Key to modify xyY value and use "ID" key to modify the TEXT description Following is the procedure to do white-balance adjust .

2. Setting the color temp. you want
   A. MEM.CHANNEL 3 (Warm color):
      Warm color temp. Parameter is x = 313 ±25, y = 329 ±25, Y=180cd/ m^2
   B. MEM.CHANNEL 4 (Normal color):
      Normal color temp. Parameter is x = 301 ±25, y = 317 ±25, Y=180cd/ m^2
   C. MEM.CHANNEL 9 (Cool color):
      Cool color temp. parameter is x = 283 ±25, y = 297 ±25, Y=180cd/m^2
   D. MEM.CHANNEL 10 (sRGB color):
      sRGB color temp. parameter is x = 313 ±25, y = 329 ±25, Y= 180cd/m^2
3. Into Factory mode of WA17W:
   Press the MENU button, pull out the power cord, and then plug the power cord. Then the factory OSD will be at the left top of the panel.

4. Bias adjustment:

   Set the **Contrast** to 50; Adjust the **Brightness** to 80.

5. Gain adjustment:
Move cursor to "-F-" and press MENU key

   A. Adjust Warm (6500K) color-temperature
      1. Switch the chroma-7120 to **RGB-Mode** (with press "MODE" button)
      2. Switch the MEM.channel to Channel 3 (with up or down arrow on chroma 7120)
      3. The LCD-indicator on chroma 7120 will show x = 313 ±25, y = 329 ±25, Y=180cd/m^2
      4. Adjust the RED on factory window until chroma 7120 indicator reached the value R=100
      5. Adjust the GREEN on factory window until chroma 7120 indicator reachedthe value G=100
      6. Adjust the BLUE on factory window until chroma 7120 indicator reached the value B=100
      7. Repeat above procedure (item 4, 5, 6) until chroma 7120 RGB value meet the tolerance =100±2
   B. Adjust Normal (7300K) color-temperature
      1. Switch the chroma-7120 to **RGB-Mode** (with press "MODE" button)
      2. Switch the MEM.channel to Channel 4(with up or down arrow on chroma 7120)
      3. The LCD-indicator on chroma 7120 will show x = 301 ±25, y = 317 ±25, Y=180cd/m^2
      4. Adjust the RED on factory window until chroma 7120 indicator reached the value R=100
      5. Adjust the GREEN on factory window until chroma 7120 indicator reachedthe value G=100
      6. Adjust the BLUE on factory window until chroma 7120 indicator reached the value B=100
      7. Repeat above procedure (item 4, 5, 6) until chroma 7120 RGB value meet the tolerance =100±2
   C. Adjust Cool (9300K) color-temperature
      1. Switch the Chroma-7120 to **RGB-Mode** (with press "MODE" button)

2. Switch the MEM. Channel to Channel 9 (with up or down arrow on chroma 7120)
3. The LCD-indicator on chroma 7120 will show x = 283 ±25, y = 297 ±25, Y=180cd/m^2
4. Adjust the RED on factory window until chroma 7120 indicator reached the value R=100
5. Adjust the GREEN on factory window until chroma 7120 indicator reached the value G=100
6. Adjust the BLUE on factory window until chroma 7120 indicator reached the value B=100
7. Repeat above procedure (item 4, 5, 6) until chroma 7120 RGB value meet the tolerance =100±2

D. Adjust sRGB color-temperature

1. Switch the chroma-7120 to **RGB-Mode** (with press “MODE” button)
2. Switch the MEM.channel to Channel 10 (with up or down arrow on chroma 7120)
3. The LCD-indicator on chroma 7120 will show x = 313 ±25, y = 329 ±25, Y= 180cd/m^2
4. Adjust the RED on factory window until chroma 7120 indicator reached the value R=100
5. Adjust the GREEN on factory window until chroma 7120 indicator reachedthe value G=100
6. Adjust the BLUE on factory window until chroma 7120 indicator reached the value B=100
7. Repeat above procedure (item 4, 5, 6) until chroma 7120 RGB value meet the tolerance =100±2

E. Turn the Power-button off to quit from factory mode.

10. Monitor Exploded View

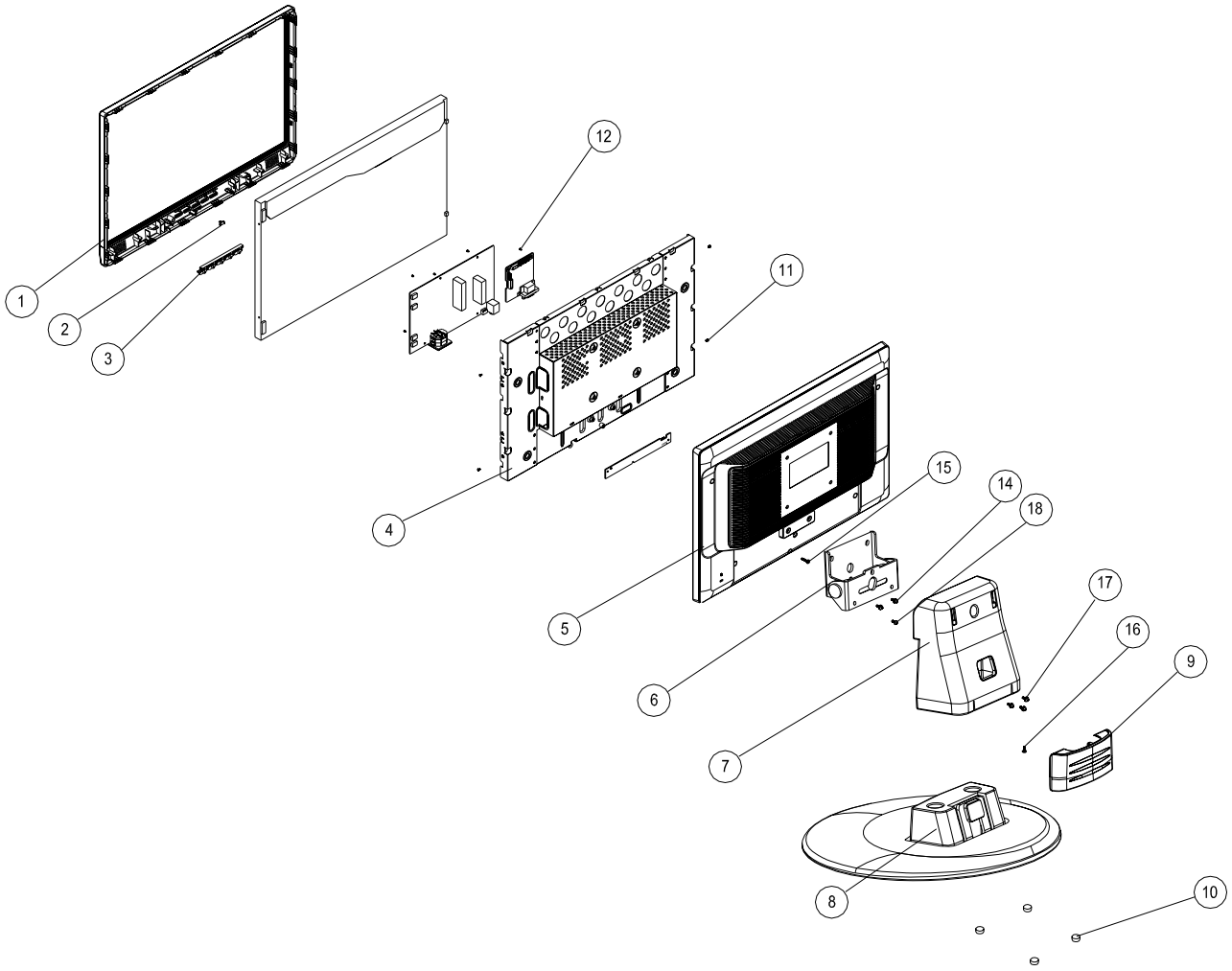

18	SCREW	0M1G340-8-47	1	
17	SCREW	AQ1G1740-10-47	3	
16	SCREW	0M1G1740-10-225	1	
15	Screw M3x14	Q1G930-14-47	1	
14	Screw M4x10	AM1G1740-10-47	2	
12	Screw M3x6	M1G1730-6-120	6	
11	Screw M3x5	M1G130-5-120	4	
10	Rubber Foot	012G394-3	4	
9	Cable Cover	A33G0030-1	1	
8	Base	A34G0097-1	1	
7	Stand	A34G0046-3	1	
6	Hinge	Q37G0055-1	1	
5	Rear Cover	A34G0433-5	1	
4	Main Frame	A15G0207-K-1	1	
3	Key Button	A33G0171-1	1	
2	LED Lens	A33G0182-1	1	
1	Bezel	A34G0312-1	1	
NO.	Part Name	Part No.	Q'ty	Note
L17WA-7k2-7s1				

11. BOM List

T77HRTNCMWPUDN

Location	Part No.	Description
	040G 581 26704	SHIPPING LABEL
	040G 58160811A	GREEN DOT LABEL
	041G 68508 A	control card
	044G600210A	PAPER BOARD
	044G9003220	CORNER PAPER
	045G 77 3	PE PACKING
	050G 600 2	HANDLE1
	050G 600 3	HANDLE2
	052G 1150 C	INSULATING TAPE
	052G 1185	MIDDLE TAPE
	052G 1186	SMALL TAPE
	052G 1211 A	165MINIUM TAPE
	052G 1211527	ALUMINUM FOIL TAPE
	052G6019 1	INSULATING TAPE
E078	078G 322 7 Y	SPK 8 OHM 1.5W 260mm 43X18mm SUNLINK
	089G 728CAA DB	D-SUB
	089G1748CAA AC	SIGNAL CABLE DVI COMLINK
E08907	089G179J30N 9A	FFC CABLE
	089G404A15N IS	POWER CORD
	095G8014 6D 41	HARNESS 6P-6P 170mm
	0M1G 130 5120	SCREW
	0M1G 340 8 47 CR3	SCREW
	0M1G1730 6120	SCREW,42-D020523
	0Q1G 930 14 47 CR3	SCREW
	0Q1G1030 8120	SCREW
	705GQ734412	STAND ASS`Y
	750GLH70GWB12N	PANEL HSD170MGW1 B00 NJ HSD
	A15G0207 K 4	MAIN FRAME
	A33G0030ABJ 1L 32	CABLE CLAMP
	A33G0171ABJ 1L	FUNCTION BUTTON
	A33G0182 1 1C	POWER LENS
	A34G0097ABJ 1B 33	BASE 06S4
	A34G0312ABJC1B 30	BEZEL L17WA-7KH2
	A34G0433ABJ 8B	REAR COVER 17
	AM1G1740 10 47 CR3	SCREW
	CBPC8HRDAOQ	MAIN BOARD
	KEPC7QD5	KEY BOARD
	PWPC721HE4	POWER BOARD
	Q07G 8 3112	COMPOUND PALLET
	Q40G0001624 4A	PALLET LABEL
	Q41G780A61572A	wearnes manual

	Q44G7069 1	EPS
	Q44G7069 2	EPS
	Q44G7069961 1A	17"LCD CARTON
	Q45G 88606 R	PE BAG FOR BASE
	Q45G 88607 R	pe bag for monitor
	Q52G6020 44	PROTECT FILM
	045G 76 28 RN	PE BAG FOR MANUAL
	070GHDCP500HDC	HDCP CODE
	089G 17356C554	AUDIO CABLE
	Q40G 17N961 1A	RATING LABEL
	Q41G780A961 1A	MANUAL
	040G 58162435A	P/N LABEL
	Q26G 800504 2	BAR CODE LABEL
	0M1G1740 10225 CR3	SCREW
	A34G0046ABJ 3B	STAND
	AQ1G1740 10 47 CR3	SCREW
M037	Q37G0055 1	HINGE
	040G 45762412B	CBPC LABEL
CN202	033G3802 6	WAFER
CN201	033G3802 9	WAFER 9P RIGHT ANELE PITCH
CN601	033G801930F CH JS	CONNECTOR
	051G 6 4503	GLUE_RTV
	055G 100611	TIN STICK W/O PB
	055G 100611500	TIN STICK W/O PB
R507	061G152M339 64	CHIPR 3.3 OHM +-5% 2W
C405	067G 3151007KV	ELCAP 10UF M 50V 105℃ KINGNICHI
C202	067G 3151014KV	EC 105℃ CAP 100UF M 25V
C203	067G 3151014KV	EC 105℃ CAP 100UF M 25V
C505	067G 3152207KV	ELCAP 22UF M 50V 105℃ KING NICHI
C604	067G 3154704KV	ELCAP 47UF M 25V 105℃ KINGNICHI
CN301	088G 35315F H	D-SUB 15PIN
CN302	088G 35424F N	DVI 24PIN CONN F
X401	093G 22 45 H	24MHZ/30PF/49US
CN001	033G3802 6H	WAFER 6P RIGHT ANGLE PITCH 2.0
SW002	077G 600 1GCJ	TACT SWITCH TSPB-2 -NP
SW001	077G 600 1GCJ	TACT SWITCH TSPB-2 -NP
SW004	077G 600 1GCJ	TACT SWITCH TSPB-2 -NP
SW003	077G 600 1GCJ	TACT SWITCH TSPB-2 -NP
SW005	077G 600 1GCJ	TACT SWITCH TSPB-2 -NP
LED001	081G 12 1 GP	LED GP32032M/R003-ZY-33
	040G 45762420A	LABEL 25x6mm
GND1	009G6005 1	GROUND TERMINAL
CN102	033G3802 4 DH JF	WAFER
CN801	033G8020 2E F	CONNECTOR
CN802	033G8020 2E F	CONNECTOR
IC903	056G 139 7 1	IC EL817MA M-TYPE

U101	056G 616 37	IC TPA6021A4NE4 2W*2 PDIP-20
NR901	061G 58080 WT	8 OHM NCT
R914	061G152M47852T	RST MOFR 0.47 OHM +-5% 2WS
C903	063G 10747410V	0.47UF 275VAC ARCO
C938	065G 1K152 1T	1.5NF/1KV Z5F+-10%
C801	065G 6J1506ET	15PF 5% SL 6KV
C902	065G305M1022BP	Y2 1000PF M 250VAC Y5P
C901	065G305M1022BP	Y2 1000PF M 250VAC Y5P
C921	065G306M3322BP	3300PF 20%
C907	067G 40Z10115K	CAP 105℃ 100UF M 450V
C922	067G215D4714KV	E.C 105℃ CAP 470UF M 25V ED SERIES
C802	067G215D4714KV	E.C 105℃ CAP 470UF M 25V ED SERIES
C918	067G215D6814KV	CAP 105℃ 680uF M 25V
C917	067G215D6814KV	CAP 105℃ 680uF M 25V
C940	067G215S1023KV	105℃ 1000UF M 16V
C939	067G215S1023KV	105℃ 1000UF M 16V
C915	067G215S4713KV	EC 105℃ CAP 470UF M 16V
L902	073G 174 65 H	LINE FILTER
T801	080GL17T 40 H	XFMR INVERTER DADON
CN901	087G 501 32 S	AC SOCKET
CN101	088G 30214K DC	PHONE JACK 5PIN
BD901	093G 50460 28	BRIDGE DIODE KBP208G LITEON
CN902	095G801410E 51	WIRE HARNESS
	705GQ7 57001	Q901 ASS'Y
	705GQ7 93001	D905 ASS'Y
	705GQ761006	R908 ASS'Y
	705GQ793040	D906 ASS'Y
HS6	Q90G6295 3	HEAT SINK
L901	S73G17476V	LINE FILTER ASS'Y
L904	S73G25391V1	CHOKE COIL ASS'Y
L903	S73G25391V1	CHOKE COIL ASS'Y
T901	S80GL17T33V	TRANSFORMER ASS'Y
U402	056G 158501	AZ431AN-A-E1
U501	056G 562180	IC RTD2525LH-GR QFN-48
U201	056G 585 4A	AP1117E33LA
U401	056G1125701 X(WW7RWR7HDQ1)	IC MCU RTD2120L-LF REALTEK
U403	056G1133 89	IC AF24BC16-SI 16K SOIC-8
Q202	057G 417 4	PMBS3904/PHILIPS-SMT(04)
Q401	057G 417 4	PMBS3904/PHILIPS-SMT(04)
Q301	057G 417 4	PMBS3904/PHILIPS-SMT(04)
Q204	057G 417 6	PMBS3906/PHILIPS-SMT(06)
Q205	057G 417 6	PMBS3906/PHILIPS-SMT(06)
Q602	057G 417 6	PMBS3906/PHILIPS-SMT(06)
Q501	057G 417 22 T	TRA KN2907AS -60V/-0.6A SOT-23
Q502	057G 417 22 T	TRA KN2907AS -60V/-0.6A SOT-23

Q601	057G 763 1	A03401 SOT23 BY AOS(A1)
R302	061G0402000	RST CHIPR 0 OHM +-5% 1/16W
R429	061G0402000	RST CHIPR 0 OHM +-5% 1/16W
R325	061G0402100	RST CHIPR 10 OHM +-5% 1/16W
R324	061G0402100	RST CHIPR 10 OHM +-5% 1/16W
R323	061G0402100	RST CHIPR 10 OHM +-5% 1/16W
R322	061G0402100	RST CHIPR 10 OHM +-5% 1/16W
R321	061G0402100	RST CHIPR 10 OHM +-5% 1/16W
R320	061G0402100	RST CHIPR 10 OHM +-5% 1/16W
R319	061G0402100	RST CHIPR 10 OHM +-5% 1/16W
R318	061G0402100	RST CHIPR 10 OHM +-5% 1/16W
R306	061G0402101	RST CHIPR 100 OHM +-5% 1/16W
R308	061G0402101	RST CHIPR 100 OHM +-5% 1/16W
R309	061G0402101	RST CHIPR 100 OHM +-5% 1/16W
R311	061G0402101	RST CHIPR 100 OHM +-5% 1/16W
R312	061G0402101	RST CHIPR 100 OHM +-5% 1/16W
R313	061G0402101	RST CHIPR 100 OHM +-5% 1/16W
R315	061G0402101	RST CHIPR 100 OHM +-5% 1/16W
R317	061G0402101	RST CHIPR 100 OHM +-5% 1/16W
R408	061G0402101	RST CHIPR 100 OHM +-5% 1/16W
R409	061G0402101	RST CHIPR 100 OHM +-5% 1/16W
R410	061G0402101	RST CHIPR 100 OHM +-5% 1/16W
R420	061G0402101	RST CHIPR 100 OHM +-5% 1/16W
R422	061G0402101	RST CHIPR 100 OHM +-5% 1/16W
R430	061G0402101	RST CHIPR 100 OHM +-5% 1/16W
R432	061G0402101	RST CHIPR 100 OHM +-5% 1/16W
R433	061G0402101	RST CHIPR 100 OHM +-5% 1/16W
R434	061G0402101	RST CHIPR 100 OHM +-5% 1/16W
R435	061G0402101	RST CHIPR 100 OHM +-5% 1/16W
R442	061G0402101	RST CHIPR 100 OHM +-5% 1/16W
R508	061G0402101	RST CHIPR 100 OHM +-5% 1/16W
R509	061G0402101	RST CHIPR 100 OHM +-5% 1/16W
R303	061G0402101	RST CHIPR 100 OHM +-5% 1/16W
R301	061G0402101	RST CHIPR 100 OHM +-5% 1/16W
R503	061G0402102	RST CHIPR 1 KOHM +-5% 1/16W
R454	061G0402102	RST CHIPR 1 KOHM +-5% 1/16W
R453	061G0402102	RST CHIPR 1 KOHM +-5% 1/16W
R424	061G0402102	RST CHIPR 1 KOHM +-5% 1/16W
R423	061G0402102	RST CHIPR 1 KOHM +-5% 1/16W
R402	061G0402102	RST CHIPR 1 KOHM +-5% 1/16W
R436	061G0402103	RST CHIPR 10 KOHM +-5% 1/16W
R438	061G0402103	RST CHIPR 10 KOHM +-5% 1/16W
R425	061G0402103	RST CHIPR 10 KOHM +-5% 1/16W
R416	061G0402103	RST CHIPR 10 KOHM +-5% 1/16W
R407	061G0402103	RST CHIPR 10 KOHM +-5% 1/16W
R406	061G0402103	RST CHIPR 10 KOHM +-5% 1/16W

R210	061G0402103	RST CHIPR 10 KOHM +-5% 1/16W
R213	061G0402103	RST CHIPR 10 KOHM +-5% 1/16W
R316	061G0402103	RST CHIPR 10 KOHM +-5% 1/16W
R404	061G0402103	RST CHIPR 10 KOHM +-5% 1/16W
R405	061G0402103	RST CHIPR 10 KOHM +-5% 1/16W
R601	061G0402103	RST CHIPR 10 KOHM +-5% 1/16W
R326	061G0402104	RST CHIPR 100 KOHM +-5% 1/16W
R207	061G0402121	RST CHIP 120R 1/16W 5%
R208	061G0402121	RST CHIP 120R 1/16W 5%
R201	061G0402201	RST CHIP 200R 1/16W 5%
R426	061G0402220	RST CHIPR 22 OHM +-5% 1/16W
R428	061G0402220	RST CHIPR 22 OHM +-5% 1/16W
R440	061G0402220	RST CHIPR 22 OHM +-5% 1/16W
R441	061G0402220	RST CHIPR 22 OHM +-5% 1/16W
R304	061G0402222	RST CHIPR 2.2 KOHM +-5% 1/16W
R305	061G0402222	RST CHIPR 2.2 KOHM +-5% 1/16W
R401	061G0402392	RST CHIP 3.9K 1/16W 5%
R403	061G0402392	RST CHIP 3.9K 1/16W 5%
R437	061G0402392	RST CHIP 3.9K 1/16W 5%
R605	061G0402472	RST CHIPR 4.7 KOHM +-5% 1/16W
R451	061G0402472	RST CHIPR 4.7 KOHM +-5% 1/16W
R445	061G0402472	RST CHIPR 4.7 KOHM +-5% 1/16W
R444	061G0402472	RST CHIPR 4.7 KOHM +-5% 1/16W
R443	061G0402472	RST CHIPR 4.7 KOHM +-5% 1/16W
R414	061G0402472	RST CHIPR 4.7 KOHM +-5% 1/16W
R202	061G0402472	RST CHIPR 4.7 KOHM +-5% 1/16W
R327	061G0402472	RST CHIPR 4.7 KOHM +-5% 1/16W
R411	061G0402472	RST CHIPR 4.7 KOHM +-5% 1/16W
R412	061G0402472	RST CHIPR 4.7 KOHM +-5% 1/16W
R413	061G0402472	RST CHIPR 4.7 KOHM +-5% 1/16W
R604	061G0402473	RST CHIPR 47 KOHM +-5% 1/16W
R415	061G0402682	RST CHIP 6K8 1/16W 5%
R431	061G0402682	RST CHIP 6K8 1/16W 5%
R439	061G0402682	RST CHIP 6K8 1/16W 5%
R307	061G0402750	RST CHIPR 75 OHM +-5% 1/16W
R310	061G0402750	RST CHIPR 75 OHM +-5% 1/16W
R314	061G0402750	RST CHIPR 75 OHM +-5% 1/16W
R602	061G0805331	RST CHIPR 330 OHM +-5% 1/8W
C401	065G0402100 31	CAP 0402 10PF J 50V NPO
C411	065G0402100 31	CAP 0402 10PF J 50V NPO
C602	065G0402103 22	CHIP 0.01UF 25V X7R
C201	065G0402104 15	MLCC 0402 0.1UF K 16V X5R
C204	065G0402104 15	MLCC 0402 0.1UF K 16V X5R
C205	065G0402104 15	MLCC 0402 0.1UF K 16V X5R
C206	065G0402104 15	MLCC 0402 0.1UF K 16V X5R
C209	065G0402104 15	MLCC 0402 0.1UF K 16V X5R

C210	065G0402104 15	MLCC 0402 0.1UF K 16V X5R
C315	065G0402104 15	MLCC 0402 0.1UF K 16V X5R
C316	065G0402104 15	MLCC 0402 0.1UF K 16V X5R
C317	065G0402104 15	MLCC 0402 0.1UF K 16V X5R
C403	065G0402104 15	MLCC 0402 0.1UF K 16V X5R
C404	065G0402104 15	MLCC 0402 0.1UF K 16V X5R
C406	065G0402104 15	MLCC 0402 0.1UF K 16V X5R
C410	065G0402104 15	MLCC 0402 0.1UF K 16V X5R
C501	065G0402104 15	MLCC 0402 0.1UF K 16V X5R
C503	065G0402104 15	MLCC 0402 0.1UF K 16V X5R
C506	065G0402104 15	MLCC 0402 0.1UF K 16V X5R
C507	065G0402104 15	MLCC 0402 0.1UF K 16V X5R
C603	065G0402104 15	MLCC 0402 0.1UF K 16V X5R
C412	065G0402105 A5	CAP 0402 1UF K 10V X5R
C402	065G0402105 A5	CAP 0402 1UF K 10V X5R
C302	065G0402330 31	CHIP CAP 0402 33pF J 50V NPO
C303	065G0402330 31	CHIP CAP 0402 33pF J 50V NPO
C301	065G0402473 12	CHIP 0.047uF 16V X7R
C304	065G0402473 12	CHIP 0.047uF 16V X7R
C306	065G0402473 12	CHIP 0.047uF 16V X7R
C307	065G0402473 12	CHIP 0.047uF 16V X7R
C309	065G0402473 12	CHIP 0.047uF 16V X7R
C311	065G0402473 12	CHIP 0.047uF 16V X7R
C310	065G0402509 31	CHIP 5pF 50V NPO
C308	065G0402509 31	CHIP 5pF 50V NPO
C305	065G0402509 31	CHIP 5pF 50V NPO
FB601	071G 56K121 M	CHIP BEAD
FB503	071G 56K121 M	CHIP BEAD
FB201	071G 56K121 M	CHIP BEAD
FB502	071G 56K121 M	CHIP BEAD
FB301	071G 59K190 B	19 OHM BEAD
FB302	071G 59K190 B	19 OHM BEAD
FB303	071G 59K190 B	19 OHM BEAD
FB304	071G1608151 5Y	CHIP BEAD 1608 150 OHM±25%
FB305	071G1608151 5Y	CHIP BEAD 1608 150 OHM±25%
FB401	071G1608151 5Y	CHIP BEAD 1608 150 OHM±25%
FB501	071G1608151 5Y	CHIP BEAD 1608 150 OHM±25%
D402	093G 64 42 PP	BAV70 SOT-23
D301	093G 6433S	DIODE BAV99 SEMTECH
D302	093G 6433S	DIODE BAV99 SEMTECH
D303	093G 6433S	DIODE BAV99 SEMTECH
D304	093G 6433S	DIODE BAV99 SEMTECH
D305	093G 6433S	DIODE BAV99 SEMTECH
D306	093G 6433S	DIODE BAV99 SEMTECH
D307	093G 6433S	DIODE BAV99 SEMTECH
D308	093G 6433S	DIODE BAV99 SEMTECH

D309	093G 6433S	DIODE BAV99 SEMTECH
D311	093G 6433S	DIODE BAV99 SEMTECH
D314	093G 6433S	DIODE BAV99 SEMTECH
D313	093G 39S 34 T	UDZSNP5.6B ROHM
D312	093G 39S 34 T	UDZSNP5.6B ROHM
D310	093G 39S 34 T	UDZSNP5.6B ROHM
ZD304	093G 39S 34 T	UDZSNP5.6B ROHM
ZD305	093G 39S 34 T	UDZSNP5.6B ROHM
ZD307	093G 39S 34 T	UDZSNP5.6B ROHM
ZD302	093G 39S 34 T	UDZSNP5.6B ROHM
ZD303	093G 39S 34 T	UDZSNP5.6B ROHM
ZD301	093G 39S 34 T	UDZSNP5.6B ROHM
D315	093G 39S 34 T	UDZSNP5.6B ROHM
D403	093G 64S522SEM	LL4148
	715G2507 1 K	MAIN BORD PCB
R003	061G0603182	RST CHIPR 1.8 KOHM +-5% 1/10W
R004	061G0603182	RST CHIPR 1.8 KOHM +-5% 1/10W
R002	061G0603302	RST CHIPR 3 KOHM +-5% 1/10W
R005	061G0603302	RST CHIPR 3 KOHM +-5% 1/10W
Q901	057G 724 11	STP9NK65ZFP
HS3	090G6263 1	HEAT SINK
	0M1G1730 8120	SCREW
HS4	090G6084 1 GP	HEAT SINK
D905	093G 60257	DIODE SB1060FCT ITO-220AB BY PAN JIT
	0M1G1730 8120	SCREW
R908	061G152M10458F	100K OHM 5% 2W
	096G 29 8	TUBE
D906	093G 60267	SP10100
	0M1G1730 8120	SCREW
HS2	Q90G6263 2	HEAT SINK
IC801	056G 379 22	IC TL494IDR SOIC-16
IC901	056G 379 76	IC LD7552BPS SOP-8
Q903	057G 417 4	PMBS3904/PHILIPS-SMT(04)
Q811	057G 417 4	PMBS3904/PHILIPS-SMT(04)
Q806	057G 417 4	PMBS3904/PHILIPS-SMT(04)
Q801	057G 417 4	PMBS3904/PHILIPS-SMT(04)
Q812	057G 417 6	PMBS3906/PHILIPS-SMT(06)
Q804	057G 417 6	PMBS3906/PHILIPS-SMT(06)
Q809	057G 759 2	RK7002
Q810	057G 759 2	RK7002
Q808	057G 760 4B	PDTA144WK SOT346
Q805	057G 760 5B	PDTC144WK SOT346
Q802	057G 763 14	AM9945N
R823	061G0603000	RST CHIPR 0 OHM +-5% 1/10W
R942	061G0603100 1F	RST CHIPR 1 KOHM +-1% 1/10W
R926	061G0603100 1F	RST CHIPR 1 KOHM +-1% 1/10W

R827	061G0603100 1F	RST CHIPR 1 KOHM +-1% 1/10W
R824	061G0603100 1F	RST CHIPR 1 KOHM +-1% 1/10W
R818	061G0603100 1F	RST CHIPR 1 KOHM +-1% 1/10W
R814	061G0603100 1F	RST CHIPR 1 KOHM +-1% 1/10W
R808	061G0603100 1F	RST CHIPR 1 KOHM +-1% 1/10W
R801	061G0603100 1F	RST CHIPR 1 KOHM +-1% 1/10W
R807	061G0603100 2F	RST CHIPR 10K OHM +-1% 1/10W
R817	061G0603100 2F	RST CHIPR 10K OHM +-1% 1/10W
R820	061G0603100 2F	RST CHIPR 10K OHM +-1% 1/10W
R828	061G0603100 2F	RST CHIPR 10K OHM +-1% 1/10W
R832	061G0603100 2F	RST CHIPR 10K OHM +-1% 1/10W
R863	061G0603100 2F	RST CHIPR 10K OHM +-1% 1/10W
R813	061G0603102	RST CHIPR 1K OHM +-5% 1/10W
R105	061G0603103	RST CHIPR 10 KOHM +-5% 1/10W
R104	061G0603103	RST CHIPR 10 KOHM +-5% 1/10W
R103	061G0603103	RST CHIPR 10 KOHM +-5% 1/10W
R102	061G0603103	RST CHIPR 10 KOHM +-5% 1/10W
R101	061G0603103	RST CHIPR 10 KOHM +-5% 1/10W
R862	061G0603105	RST CHIPR 1M OHM +-5% 1/10W
R835	061G0603105	RST CHIPR 1M OHM +-5% 1/10W
R803	061G0603106	RST CHIPR 10M OHM +-5% 1/10W
R930	061G0603243 1F	RST CHIPR 2.43K OHM +-1% 1/10W
R940	061G0603330 2F	RST CHIPR 33K OHM +-1% 1/10W
R927	061G0603360 1F	RST CHIPR 3.6K OHM +-1% 1/10W
R811	061G0603472	RST CHIPR 4.7K OHM +-5% 1/10W
R851	061G0603510 1F	RST CHIPR 5.1K OHM +-1% 1/10W
R107	061G0603512	RST CHIPR 5.1 KOHM +-5% 1/10W
R106	061G0603512	RST CHIPR 5.1 KOHM +-5% 1/10W
R841	061G0603680 2F	RST CHIPR 68K OHM +-1% 1/10W
R853	061G0603683	RST CHIPR 68K OHM +-5% 1/10W
R802	061G0603910 2F	RST CHIPR 91K OHM +-1% 1/10W
R857	061G0805000	RST CHIPR 0 OHM +-5% 1/8W
R831	061G0805100 1F	RST CHIPR 1K OHM +-1% 1/8W
R915	061G0805100 3F	RST CHIPR 100KOHM +-1% 1/8W
R804	061G0805101	RST CHIPR 100 OHM +-5% 1/8W
R943	061G0805102	RST CHIPR 1K OHM +-5% 1/8W
R925	061G0805102	RST CHIPR 1K OHM +-5% 1/8W
R826	061G0805102	RST CHIPR 1K OHM +-5% 1/8W
R938	061G0805103	RST CHIPR 10K OHM +-5% 1/8W
R924	061G0805151	RST CHIPR 150 OHM +-5% 1/8W
R850	061G0805220	RST CHIPR 22 OHM +-1% 1/8W
R839	061G0805220	RST CHIPR 22 OHM +-1% 1/8W
R829	061G0805220	RST CHIPR 22 OHM +-1% 1/8W
R825	061G0805220	RST CHIPR 22 OHM +-1% 1/8W
R837	061G0805473	RST CHIPR 47K OHM +-5% 1/8W
R810	061G0805510 2F	RST CHIPR 51K OHM +-1% 1/8W

JR902	061G1206000	RST CHIPR 0 OHM +-5% 1/4W
JR901	061G1206000	RST CHIPR 0 OHM +-5% 1/4W
JR801	061G1206000	RST CHIPR 0 OHM +-5% 1/4W
F801	061G1206000	RST CHIPR 0 OHM +-5% 1/4W
R910	061G1206100	RST CHIPR 10 OHM +-5% 1/4W
R821	061G1206100 1F	RST CHIPR 1K OHM +-1% 1/4W
R822	061G1206100 1F	RST CHIPR 1K OHM +-1% 1/4W
R918	061G1206101	RST CHIPR 100 OHM +-5% 1/4W
R919	061G1206101	RST CHIPR 100 OHM +-5% 1/4W
R920	061G1206101	RST CHIPR 100 OHM +-5% 1/4W
R935	061G1206101	RST CHIPR 100 OHM +-5% 1/4W
R961	061G1206101	RST CHIPR 100 OHM +-5% 1/4W
R962	061G1206101	RST CHIPR 100 OHM +-5% 1/4W
R946	061G1206102	RST CHIPR 1k OHM +-5% 1/4W
R945	061G1206102	RST CHIPR 1k OHM +-5% 1/4W
R944	061G1206102	RST CHIPR 1k OHM +-5% 1/4W
R941	061G1206102	RST CHIPR 1k OHM +-5% 1/4W
R108	061G1206109	RST CHIPR 1 OHM +-5% 1/4W
R912	061G1206221	RST CHIPR 220 OHM +-5% 1/4W
R904	061G1206304	RST CHIPR 300k OHM +-5% 1/4W
R932	061G1206304	RST CHIPR 300k OHM +-5% 1/4W
R933	061G1206304	RST CHIPR 300k OHM +-5% 1/4W
R855	061G1206330	RST CHIPR 33 OHM +-5% 1/4W
R856	061G1206330	RST CHIPR 33 OHM +-5% 1/4W
R909	061G1206519	RST CHIPR 5.1 OHM +-5% 1/4W
R900	061G1206684	RST CHIPR 680K OHM +-5% 1/4W
R901	061G1206684	RST CHIPR 680K OHM +-5% 1/4W
R902	061G1206684	RST CHIPR 680K OHM +-5% 1/4W
C110	065G0603101 31	CER1 0603 NP0 50V 100P PM5 R
C111	065G0603101 31	CER1 0603 NP0 50V 100P PM5 R
C842	065G0603103 32	CAP CHIP 0603 0.01UF K 50V X7R
C807	065G0603104 22	CAP CHIP 0603 0.1UF K 25V X7R
C821	065G0603104 22	CAP CHIP 0603 0.1UF K 25V X7R
C825	065G0603104 22	CAP CHIP 0603 0.1UF K 25V X7R
C834	065G0603104 22	CAP CHIP 0603 0.1UF K 25V X7R
C819	065G0603222 22	CHIP 2200PF 25V X7R
C823	065G0603222 22	CHIP 2200PF 25V X7R
C101	065G0603474 12	MLCC 0603 0.47UF K 16V X7R
C102	065G0603474 12	MLCC 0603 0.47UF K 16V X7R
C103	065G0603474 12	MLCC 0603 0.47UF K 16V X7R
C105	065G0603474 12	MLCC 0603 0.47UF K 16V X7R
C106	065G0603474 12	MLCC 0603 0.47UF K 16V X7R
C107	065G0603474 12	MLCC 0603 0.47UF K 16V X7R
C932	065G0805102 31	CAP CHIP 0805 1000PF J 50V NPO
C839	065G0805102 31	CAP CHIP 0805 1000PF J 50V NPO
C838	065G0805102 31	CAP CHIP 0805 1000PF J 50V NPO

C928	065G0805103 32	CAP CHIP 0805 10NF K 50V X7R
C930	065G0805104 32	CAP CHIP 0805 0.1uF K 50V X7R
C924	065G0805104 32	CAP CHIP 0805 0.1uF K 50V X7R
C916	065G0805104 32	CAP CHIP 0805 0.1uF K 50V X7R
C905	065G0805104 32	CAP CHIP 0805 0.1uF K 50V X7R
C824	065G0805104 32	CAP CHIP 0805 0.1uF K 50V X7R
C845	065G0805105 22	CAP CHIP 0805 1uF K 25V X7R
C109	065G0805105 22	CAP CHIP 0805 1uF K 25V X7R
C822	065G0805105 22	CAP CHIP 0805 1uF K 25V X7R
C820	065G0805221 31	CAP CHIP 0805 220PF J 50V NPO
C909	065G0805471 21	CAP CHIP 0805 470PF J 25V NPO
C912	065G1206102 72	CAP CHIP 1206 1000PF K 500V X7R
C929	065G1206102 72	CAP CHIP 1206 1000PF K 500V X7R
D813	093G 6432S	IN4148W
D916	093G 6432S	IN4148W
D915	093G 6432S	IN4148W
D903	093G 6432S	IN4148W
D817	093G 6432S	IN4148W
D814	093G 6432S	IN4148W
D812	093G 6432S	IN4148W
D805	093G 6432S	IN4148W
D806	093G 6432S	IN4148W
D807	093G 6432S	IN4148W
D801	093G 6433P	BAV99
D802	093G 6433P	BAV99
ZD801	093G 39S 10 T	RLZ6.8B BY ROHM
ZD906	093G 39S 20 T	RLZ22B LLDS
ZD922	093G 39S 25 T	RLZ5.1B LLDS
ZD902	093G 39S 40 T	RLZ 13B LLDS
ZD921	093G 39S 40 T	RLZ 13B LLDS
ZD905	093G 39S 44 T	RLZ18B LLDS
	715G2528 1	KEPC
CN901	006G 31500	EYELET
NR901	006G 31502	1.5MM RIVET
T901	006G 31502	1.5MM RIVET
IC904	056G 158 10 T	IC AZ431AZ-AE1 TO-92 BY AAC
C906	065G 2K152 1T GP	CERAMIC CAP
C104	067G215Y1014KT	EC CAP.105
C108	067G215Y1097NT	EC 1.0uF 50V KY50VB1M-TP5 5*11mm
C908	067G215Y2207KT	CAP 105℃ 22UF M 50V KINGNICHI
FB102	071G 55 9 T	FERRITE BEAD
FB801	071G 55 9 T	FERRITE BEAD
FB901	071G 55 29	FERRITE BEAD
F901	084G 55 7W	FUSE 3.15A 250V Wickmann
F903	084G 56 4W	FUSE 4.0A 250V
D900	093G 6026T52T	RECTIFIER DIODE FR107

D901	093G 6038T52T	FR103
	715G2545 2	PWPC