Chapter 6

FRU (Field Replaceable Unit) list

This chapter gives you the FRU (Field Replaceable Unit) listing in global configurations of AL1914. Refer to this chapter whenever ordering for parts to repair or for RMA (Return Merchandise Authorization).

NOTE : Please note WHEN ORDERING FRU PARTS, that you should check the most up-to-date information available on your regional web or channel(http://aicsl.acer.com.tw/spl/). For whatever reasons a part number change is made, it will not be noted in the printed Service Guide. For ACER-AUTHORIZED CERVICE PROVIDERS, your Acer office may have a DIFFERENT part number code to those given in the FRU list of this printed Service Guide. You MUST use the local FRU list provided by your regional Acer office to order FRU parts repair and service of customer machines.

NOTE: To scrap or to return the defective parts, you should follow the local government ordinance or regulations on how best to dispose it, or follow the rules set by your regional Acer office on how to return it.

FOR REV RECORD SEE SHEET 1

FOR LG PANEL(AR599)

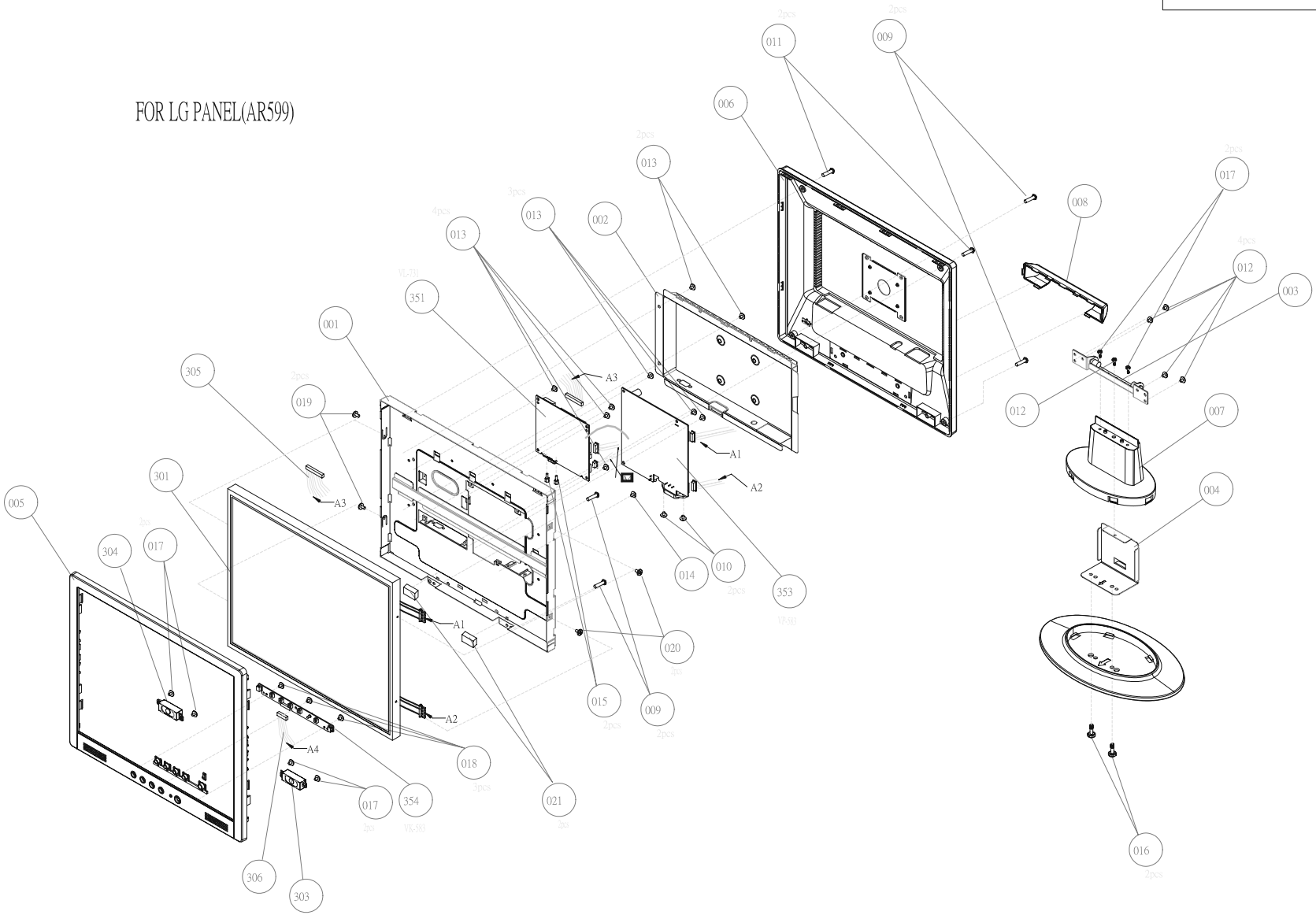

SIZE	SHEET	DRAWING NO.	REV
A3	2	582916	1M

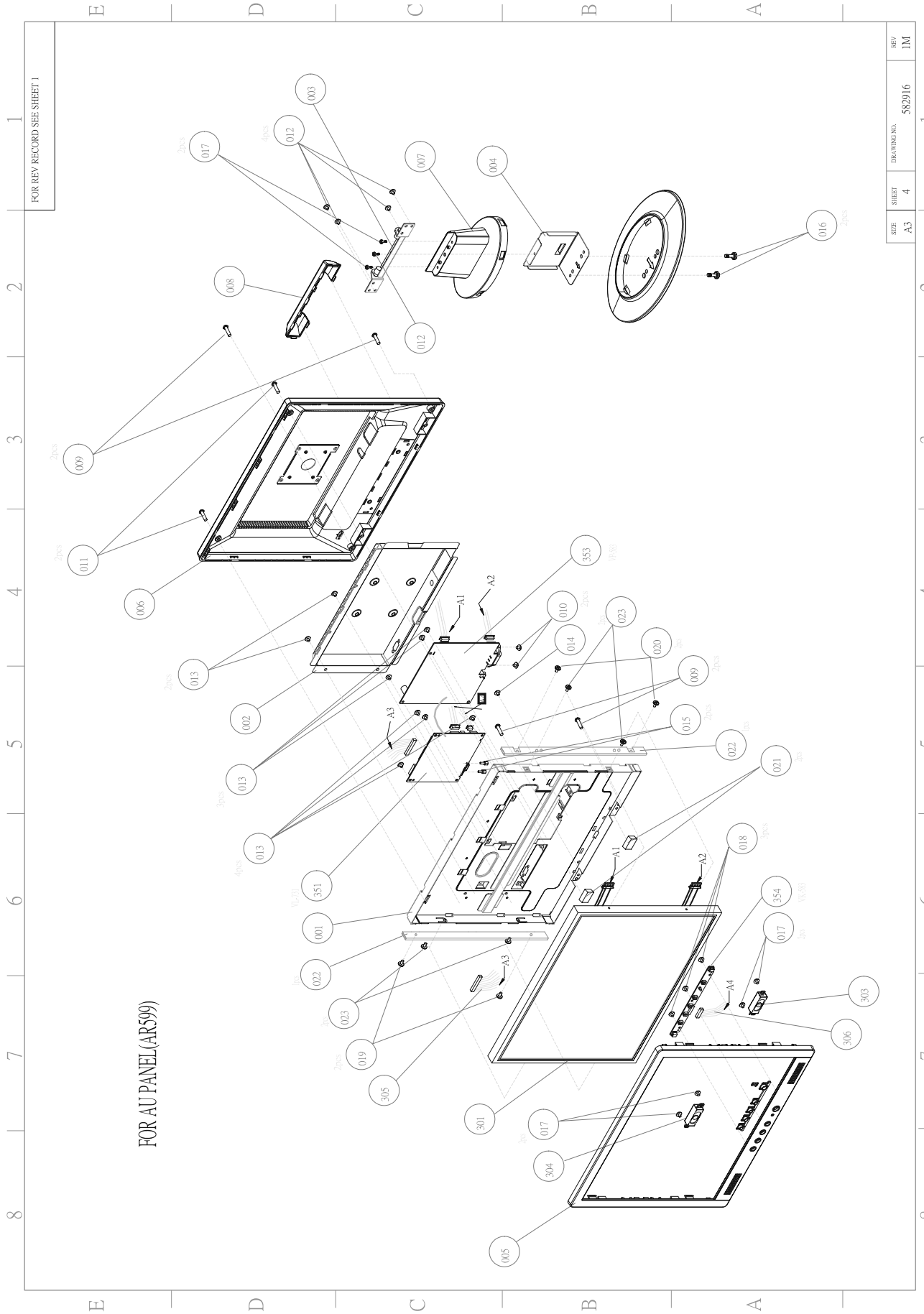
FOR REV RECORD SEE SHEET 1
SIZE A3
SHEET 4
DRAWING NO. 582916
REV 1M
FOR AU PANEL(AR599)

Part list

No.	Photo	Part Name	Part No.
1		Hinge Cover	FAAR7721000
2	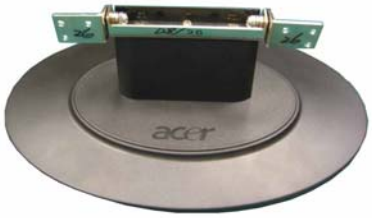	Base Assy	FAAR9913A00
3		Rear Cover	FAAR9912000
4		Base	FAAR9913000
6	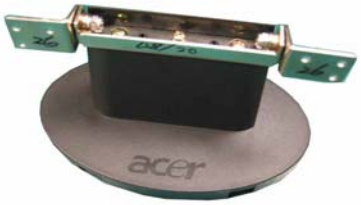	Neck	FAAR7713000
7		Main Shield	ECAR9914A00
8		MB	DA2R877V01A Or DA2R577V012

9		Power Board to MB cable	LG/AU: 453AAP300B1 Samsung: 453AAP300A1
10	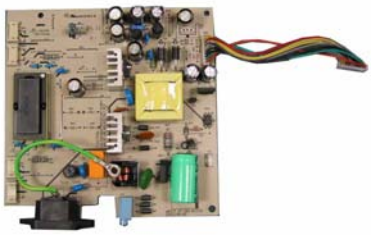	Inverter Board	LG/AU: 453AAP300B1 Samsung: 453AAP300A1
11		Front Bezel	FAAR9911A00
12		Keyboard to MB Cable	DCO20162300
13		Speaker-R	CG10021V900
14		Speaker-L	CG19921V910
15		Frame	ECAR9915A00
16		LCD (R)	AC6VG190000 AC6VA1901P0 AC6VT1901R5

17		Panel to MB cable	NBX30001040 NBX30001330
18		Function Board	454AAPE0001

Chapter 7

Schematic Diagram

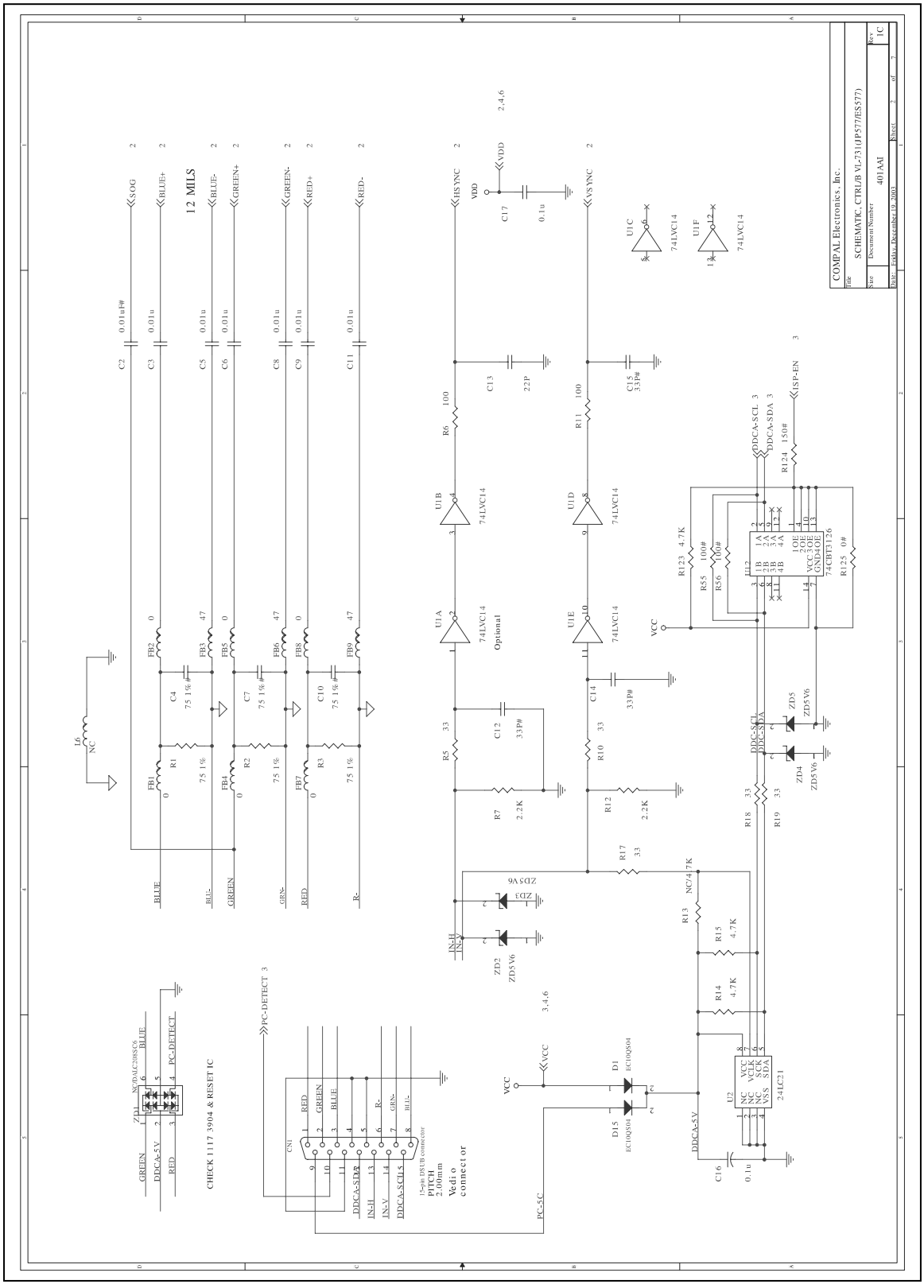

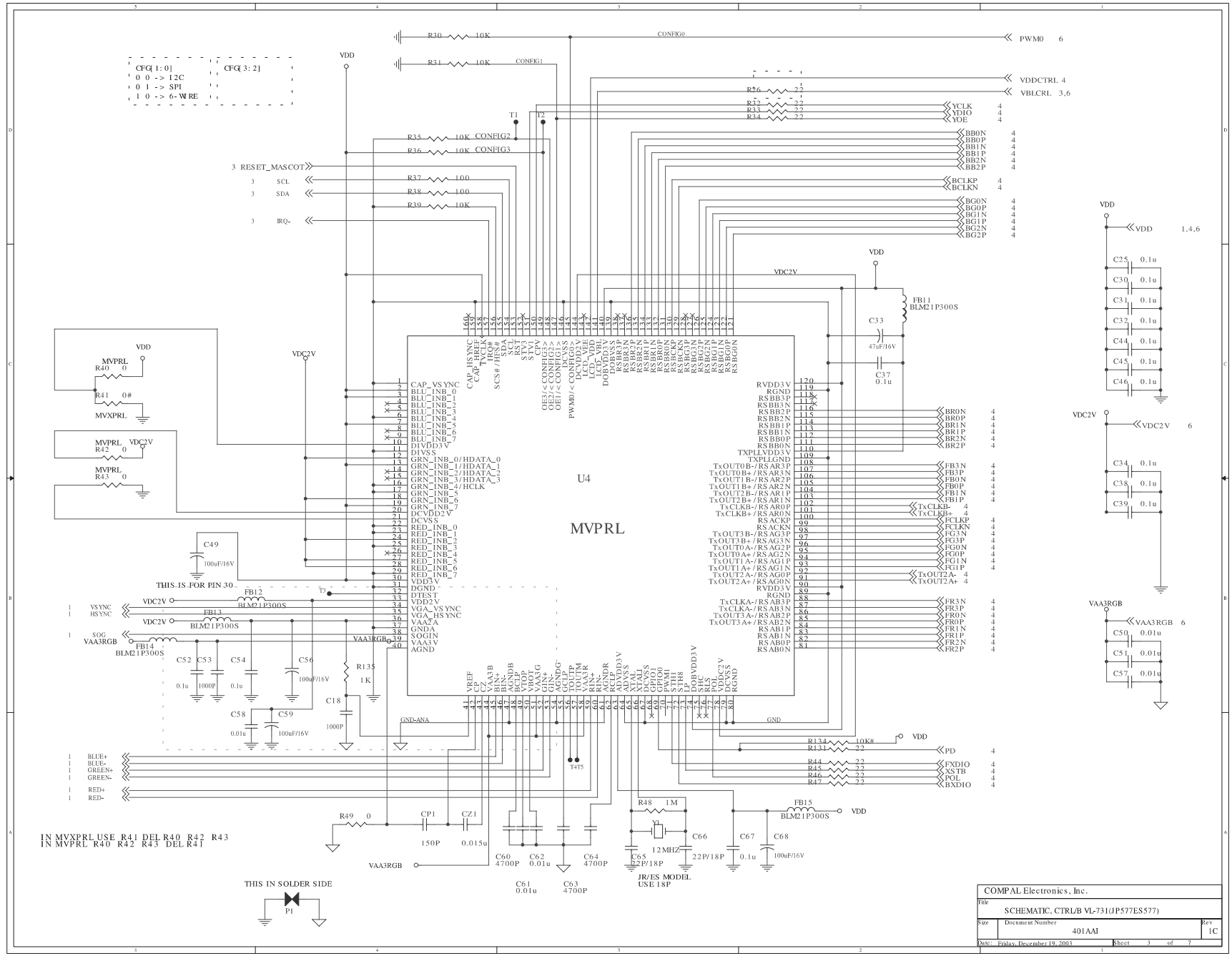
CFG[1:0]
0 0 -> I2C
0 1 -> SPI
1 0 -> 6-WIRE
CFG[3:2]
U4
MVPRL
THIS IS FOR PIN 30
IN MVXPRL USE R41 DEL R40 R42 R43
IN MVPRL R40 R42 R43 DEL R41
THIS IN SOLDER SIDE
JR/ES MODEL USE 18P
COMPAL Electronics, Inc.
SCHEMATIC, CTRL/B VL-731(JP577ES577)
401AAI
Friday, December 19, 2003

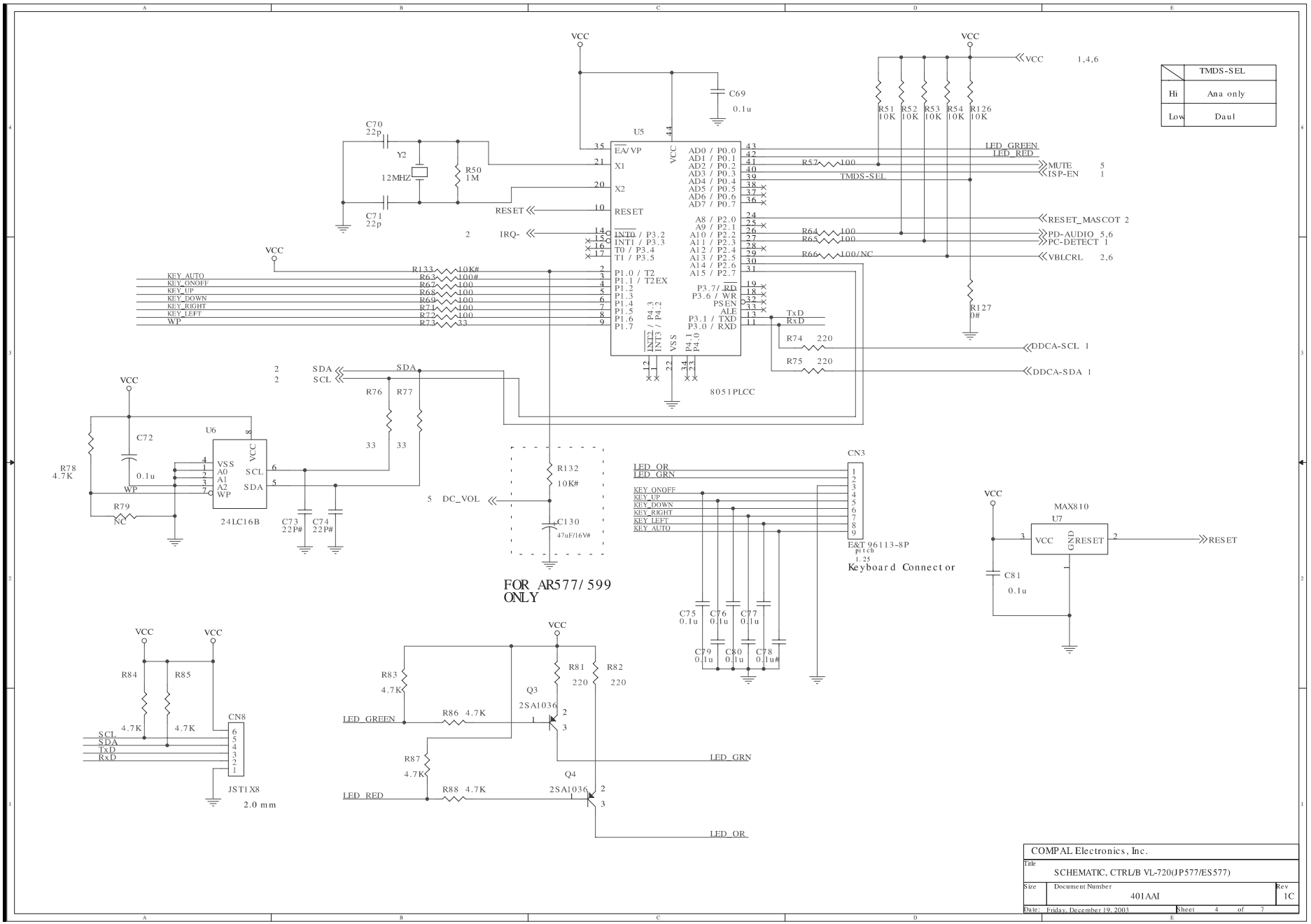

	TMDS-SEL
Hi	Ana only
Low	Daul

COMPAL Electronics, Inc.	
Title	SCHEMATIC, CTRL/B VL-720(JP577/ES577)
Size	Document Number: 401AAI
Rev	1C
Date: Friday, December 19, 2003	Sheet 4 of 7

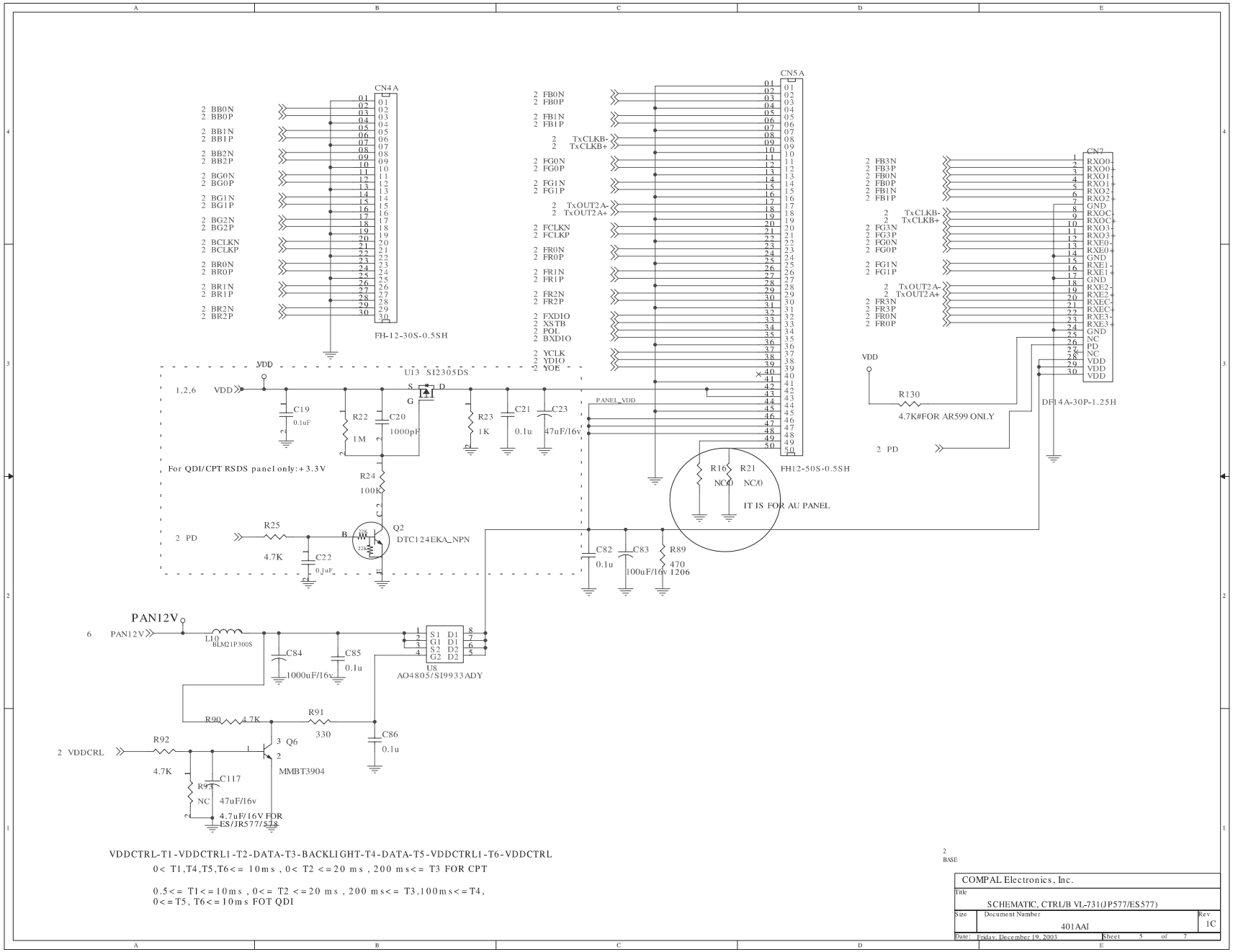
CN4A
FH-12-30S-0.5SH
CN5A
FH12-50S-0.5SH
CN7
DF14A-30P-1.25H
U13 SI2305DS
VDD
PANEL_VDD
For QDI/CPT RSDS panel only:+3.3V
Q2
DTC124EKA_NPN
IT IS FOR AU PANEL
4.7K#FOR AR599 ONLY
PAN12V
L10
BLM21P300S
U8
AO4805/SI9933ADY
Q6
MMBT3904
4.7uF/16V FOR ES/JR577/578
VDDCTRL-T1-VDDCTRL1-T2-DATA-T3-BACKLIGHT-T4-DATA-T5-VDDCTRL1-T6-VDDCTRL
0< T1,T4,T5,T6<= 10ms , 0< T2 <=20 ms , 200 ms<= T3 FOR CPT
0.5<= T1<=10ms , 0<= T2 <=20 ms , 200 ms<= T3,100ms<=T4,
0<=T5, T6<=10ms FOT QDI
BASE
COMPAL Electronics, Inc.
SCHEMATIC, CTRL/B VL-731(JP577/ES577)
401AAI
Friday, December 19, 2003
Sheet 5 of 7

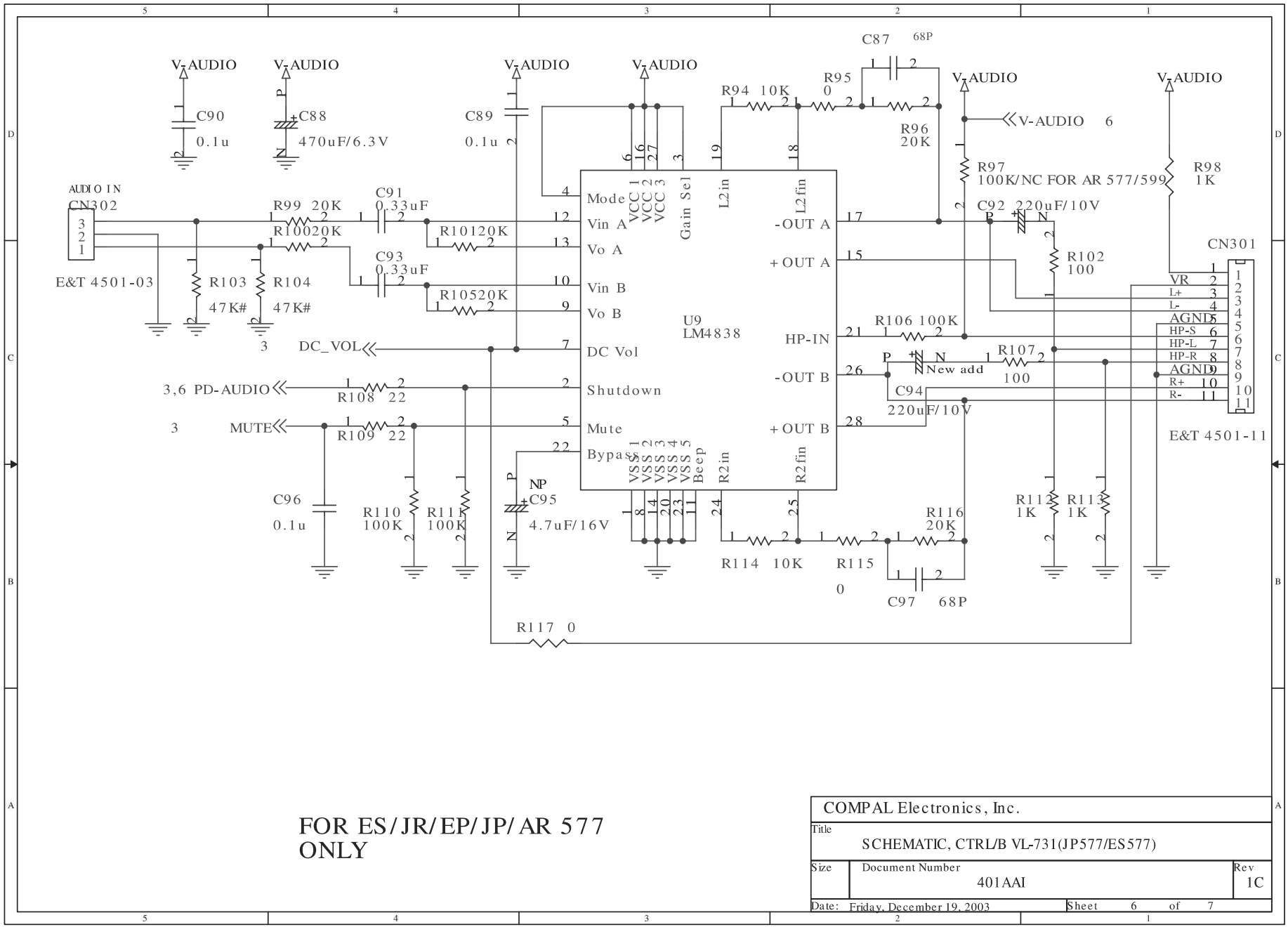

FOR ES/JR/EP/JP/AR 577 ONLY

COMPAL Electronics, Inc.		
Title: SCHEMATIC, CTRL/B VL-731(JP577/ES577)		
Size	Document Number: 401AAI	Rev: 1C
Date: Friday, December 19, 2003	Sheet 6 of 7	

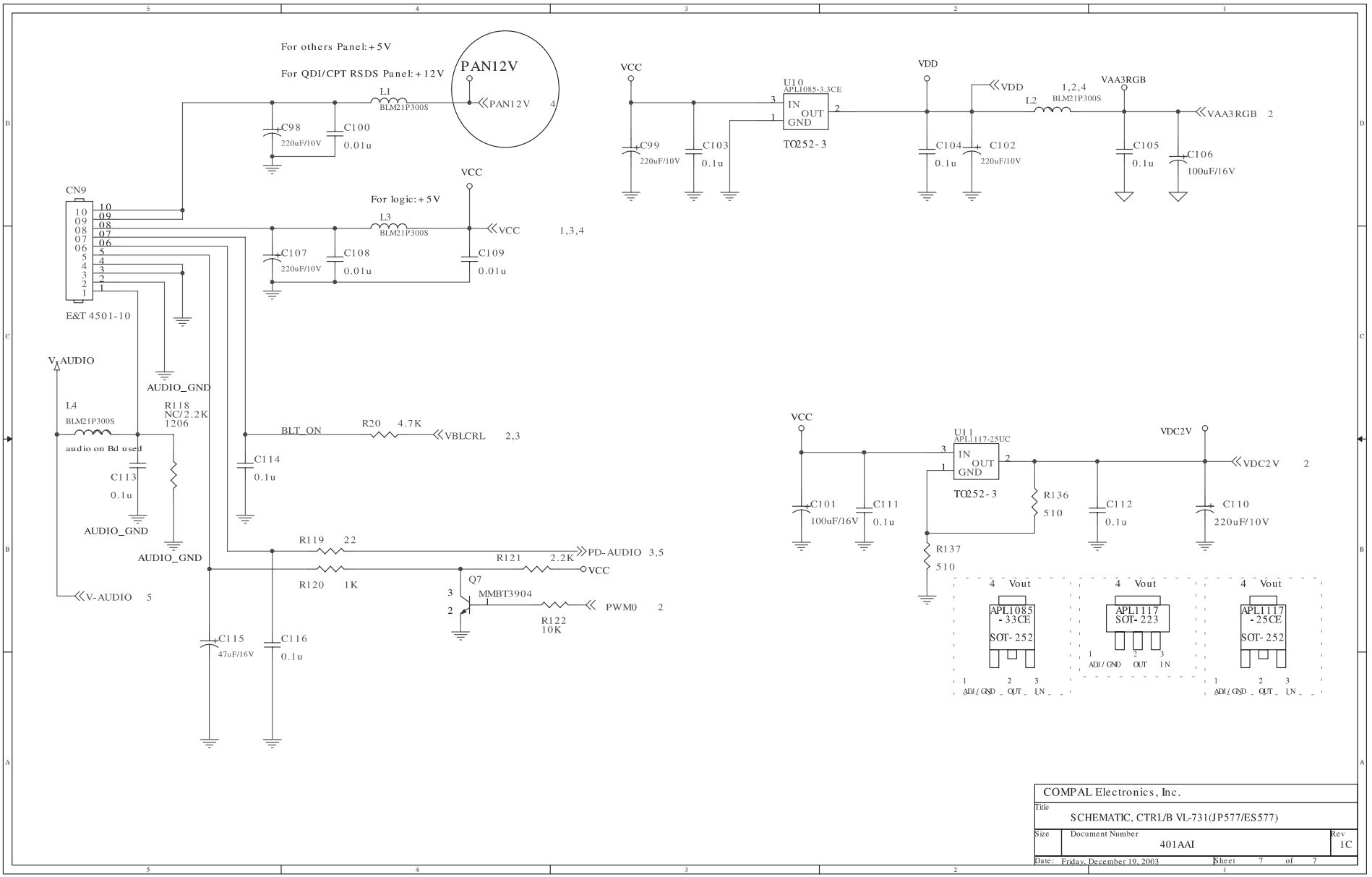

COMPAL Electronics, Inc.		
Title: SCHEMATIC, CTRL/B VL-731(JP577/ES577)		
Size	Document Number: 401AAI	Rev: 1C
Date: Friday, December 19, 2003	Sheet 7 of 7	

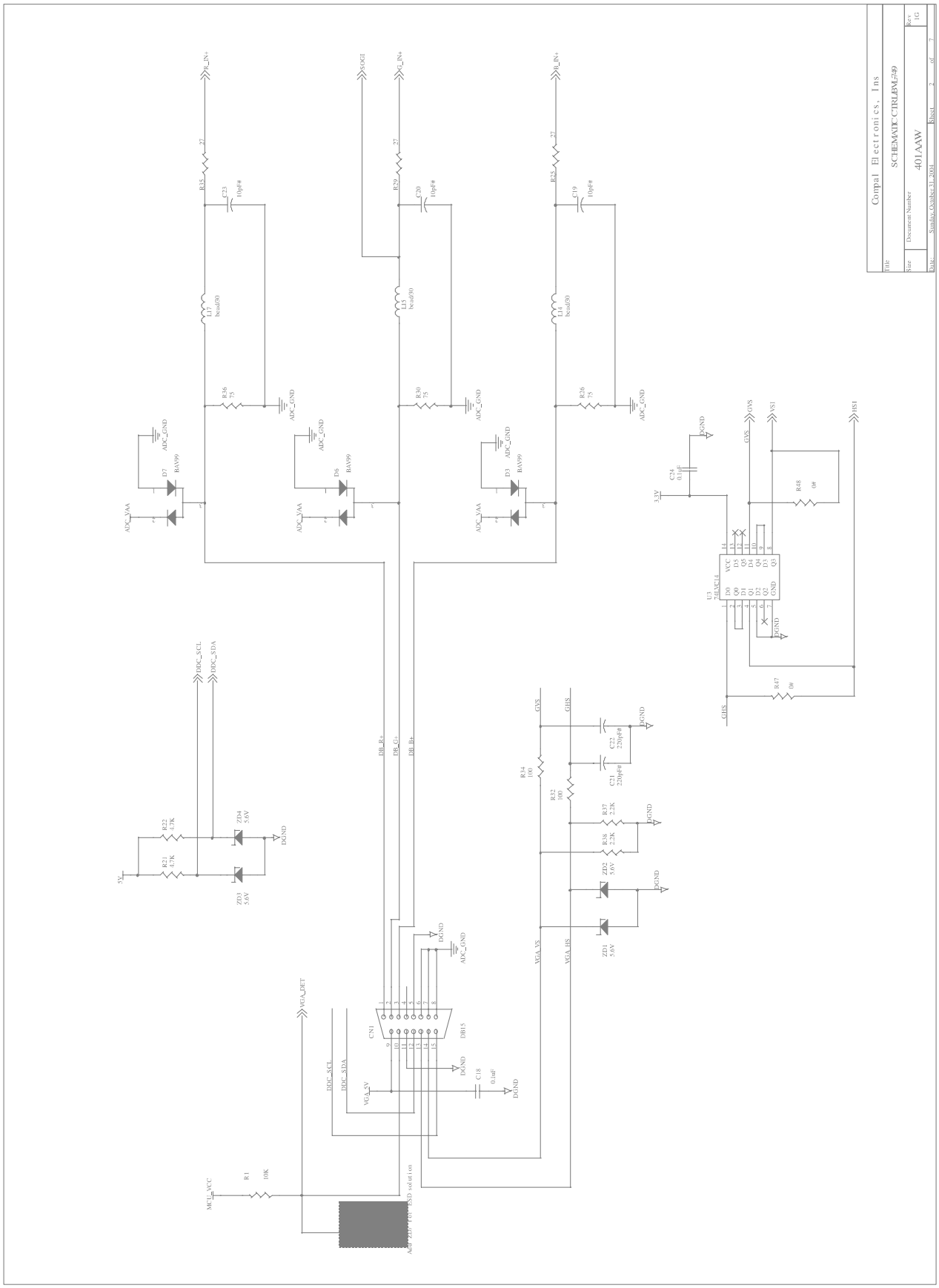
Compal Electronics, Ins
SCHEMATIC CTRL/BVL-749
401AAW
Sunday, October 31, 2004
Sheet 2 of 7
R_IN+
SOGI
G_IN+
B_IN+
R35
R29
R25
C23
C20
C19
10pF#
L17
L15
L14
bead50
R36
R30
R26
75
ADC_GND
D7
D6
D3
BAV99
ADC_VAA
C24
0.1uF
3.3V
GVS
VS1
HS1
R48
0#
U3
74LVC14
VCC
D0
D1
D2
D3
D4
D5
Q0
Q1
Q2
Q3
Q4
Q5
GND
DGND
R47
0#
GHS
DDC_SCL
DDC_SDA
DB_R+
DB_G+
DB_B+
R22
4.7K
R21
4.7K
ZD4
5.6V
ZD3
5.6V
5V
C22
220pF#
C21
220pF#
R34
100
R32
100
R37
2.2K
R38
2.2K
ZD2
5.6V
ZD1
5.6V
VGA_VS
VGA_HS
VGA_DET
CN1
DB15
VGA_5V
C18
0.1uF
MCU_VCC
R1
10K
Add ZD7 for ESD solution

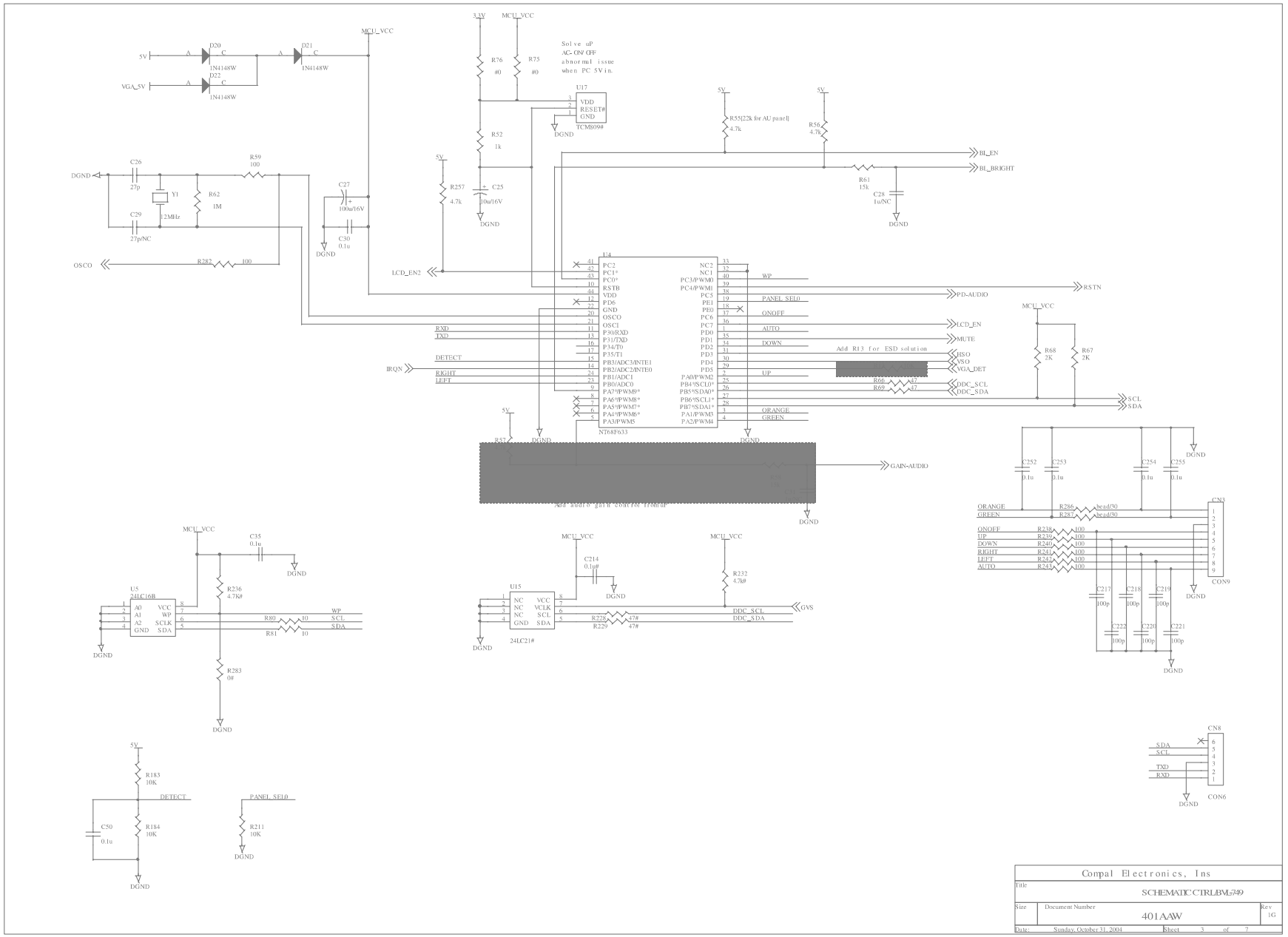

Compal Electronics, Ins		
Title: SCHEMATIC CTRL BVL5749		
Size	Document Number: 401AAW	Rev: 1G
Date: Sunday, October 31, 2004	Sheet 3 of 7	

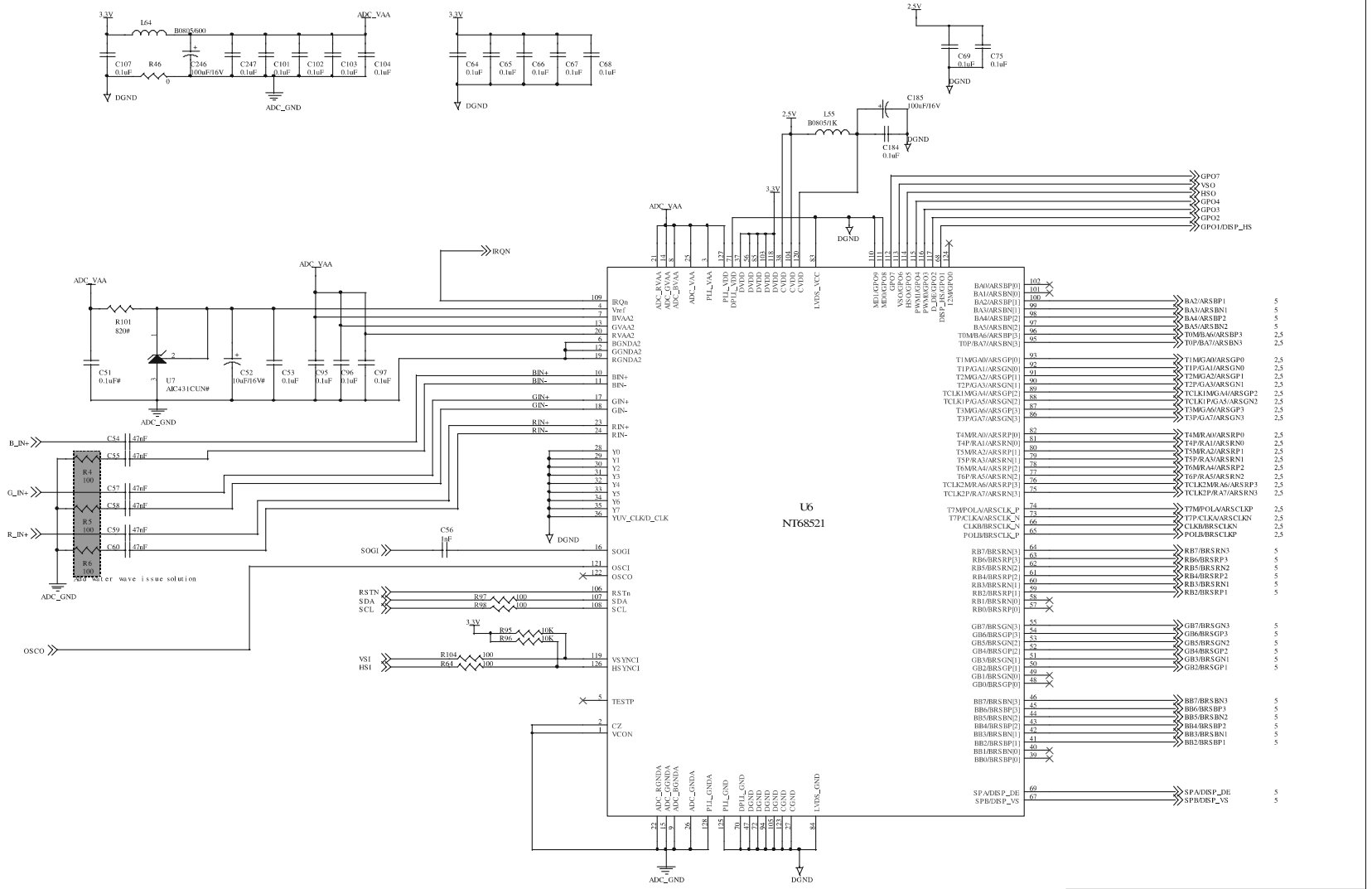

Compal Electronics, Ins			
Title	SCHEMATIC CTRL BM-7749		
Size	Document Number	401AAW	Rev 1G
Date: Sunday, October 31, 2004	Sheet 4 of 7		

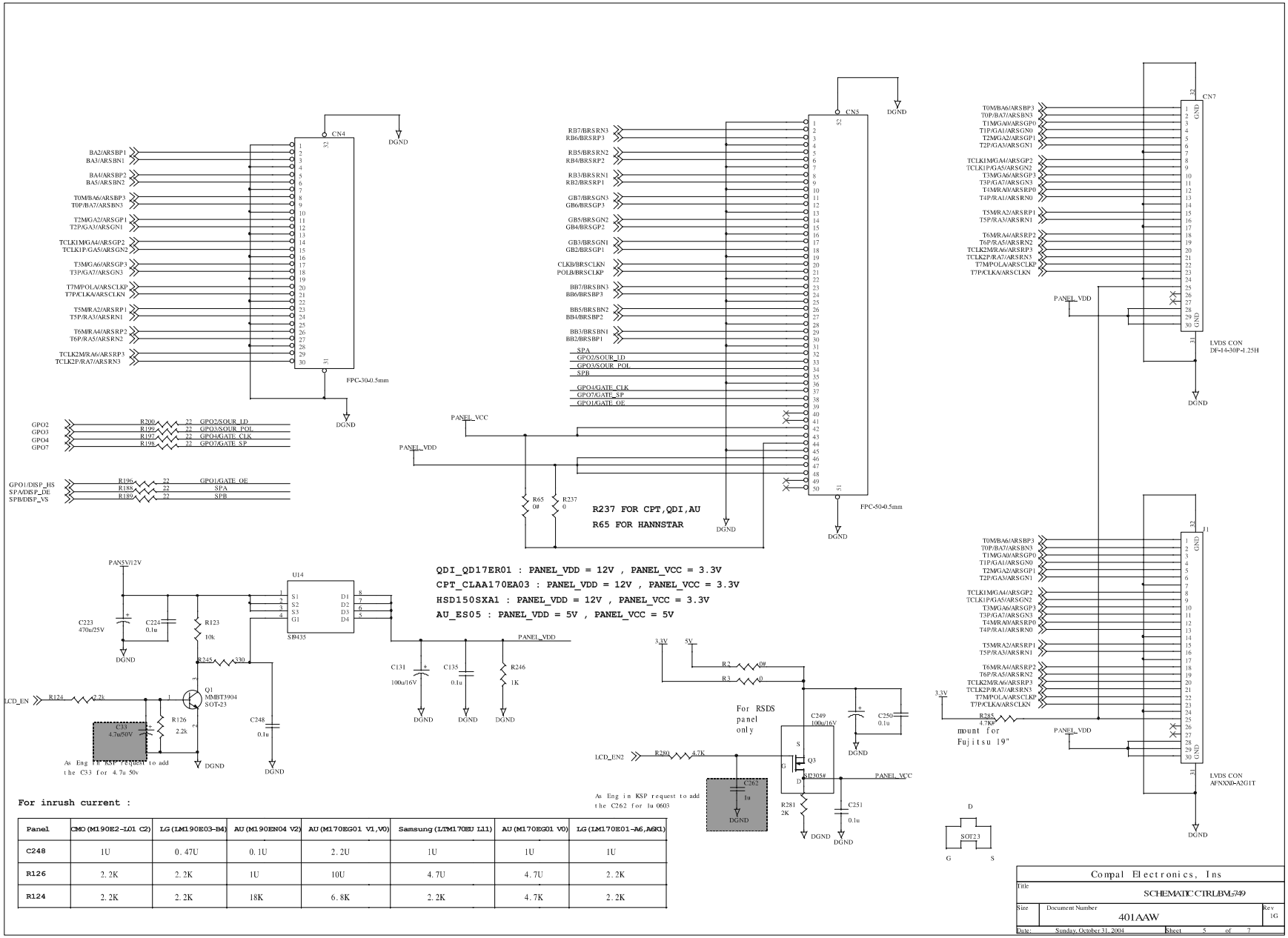

For inrush current :

Panel	CMO (M190E2-L01 C2)	LG (LM190E03-B4)	AU (M190EN04 V2)	AU (M170EG01 V1,V0)	Samsung (LTM170EU L11)	AU (M170EG01 V0)	LG (LM170E01-A6,A6K1)
C248	1U	0.47U	0.1U	2.2U	1U	1U	1U
R126	2.2K	2.2K	1U	10U	4.7U	4.7U	2.2K
R124	2.2K	2.2K	18K	6.8K	2.2K	4.7K	2.2K

Compal Electronics, Ins			
Title	SCHEMATIC CTRL BVL-749		
Size	Document Number	401AAW	Rev 1G
Date: Sunday, October 31, 2004	Sheet 5 of 7		

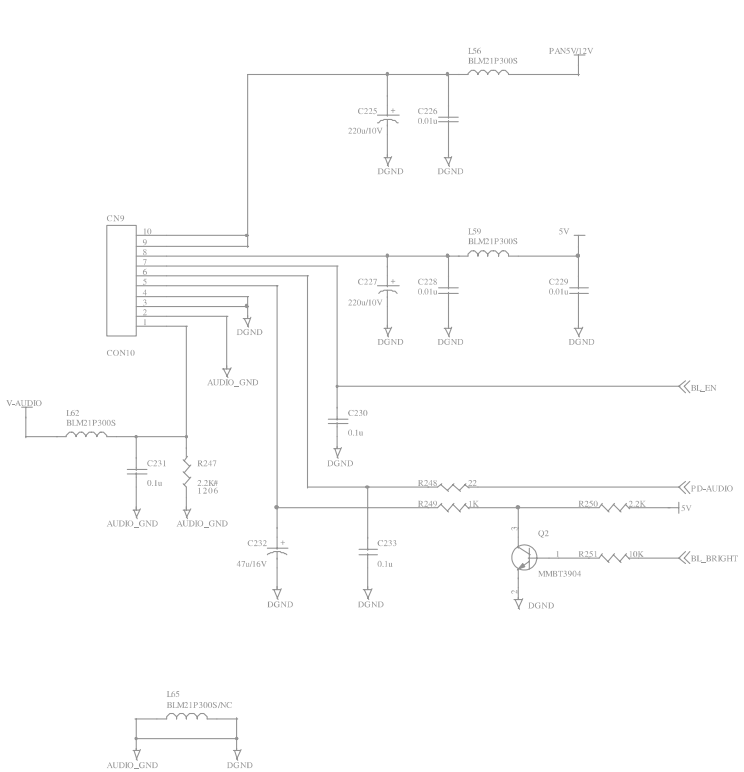

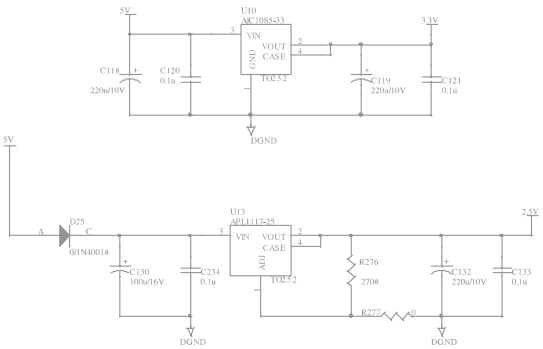

Compal Electronics, Ins		
Title: SCHEMATIC CTRL BVL5749		
Size	Document Number: 401AAW	Rev: 1G
Date: Sunday, October 31, 2004	Sheet 6 of 7	

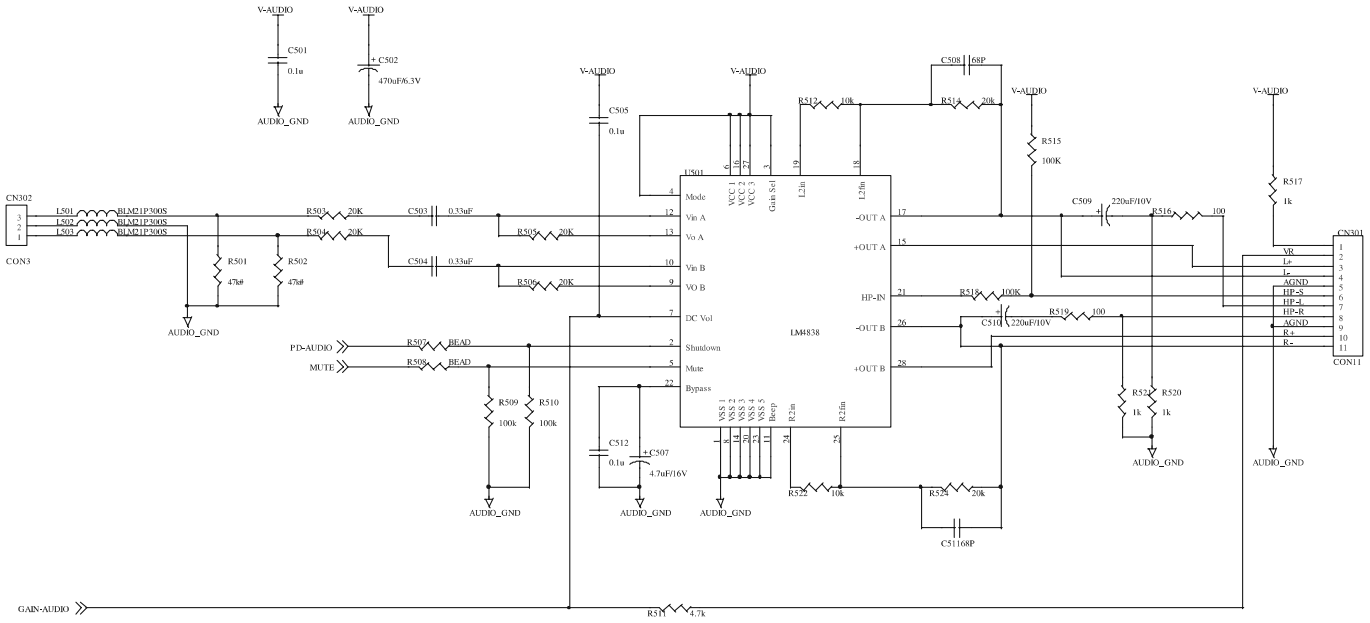

Compal Electronics, Ins		
Title	SCHEMATIC CTRL BVL749	
Size	Document Number 401AAW	Rev 1G
Date: Sunday, October 31, 2004	Sheet 7 of 7	

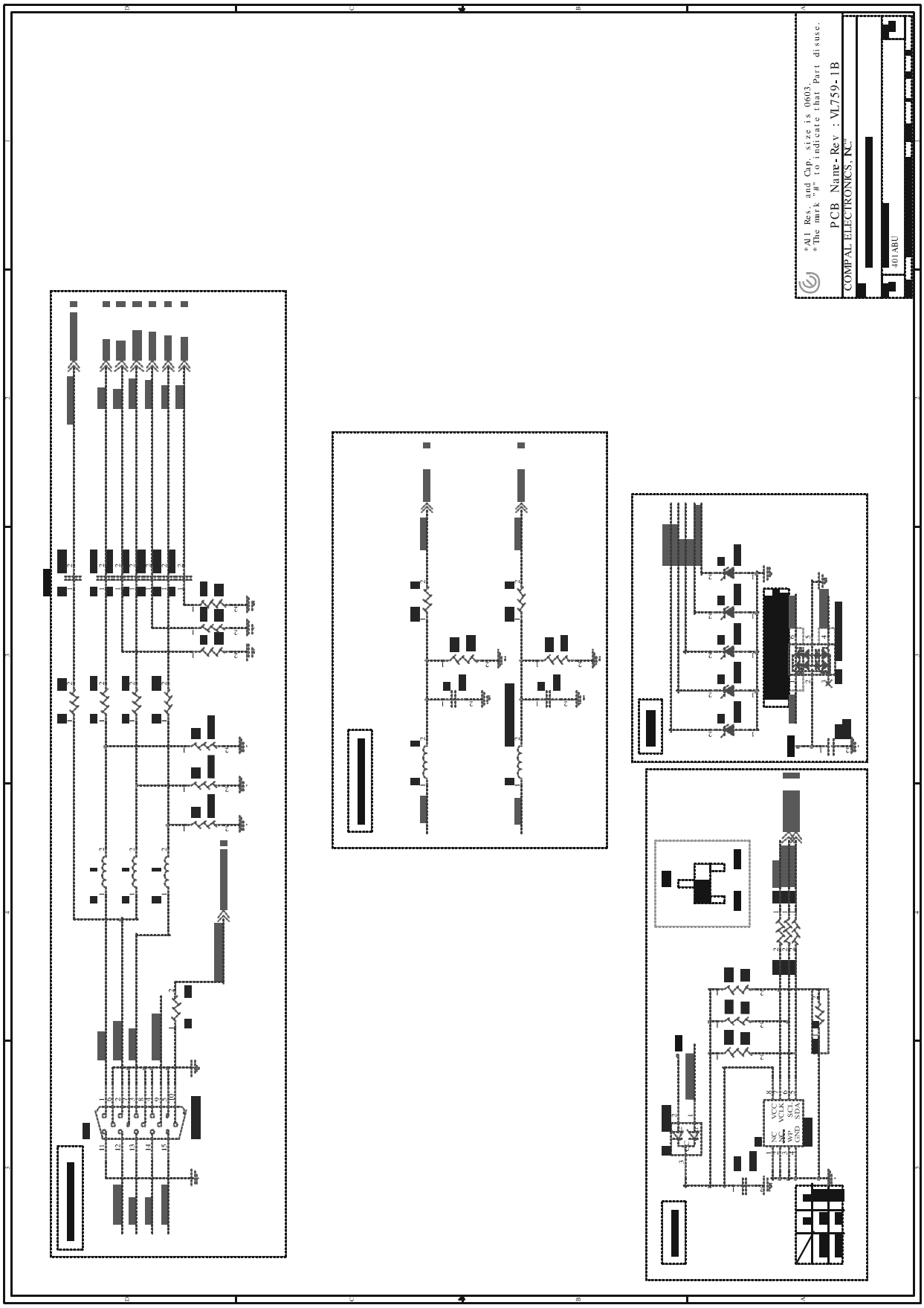
*All Res, and Cap. size is 0603.
*The mark "#" to indicate that Part disuse.
PCB Name: Rev : VL759-1B
COMPAL ELECTRONICS, INC.
401ABU

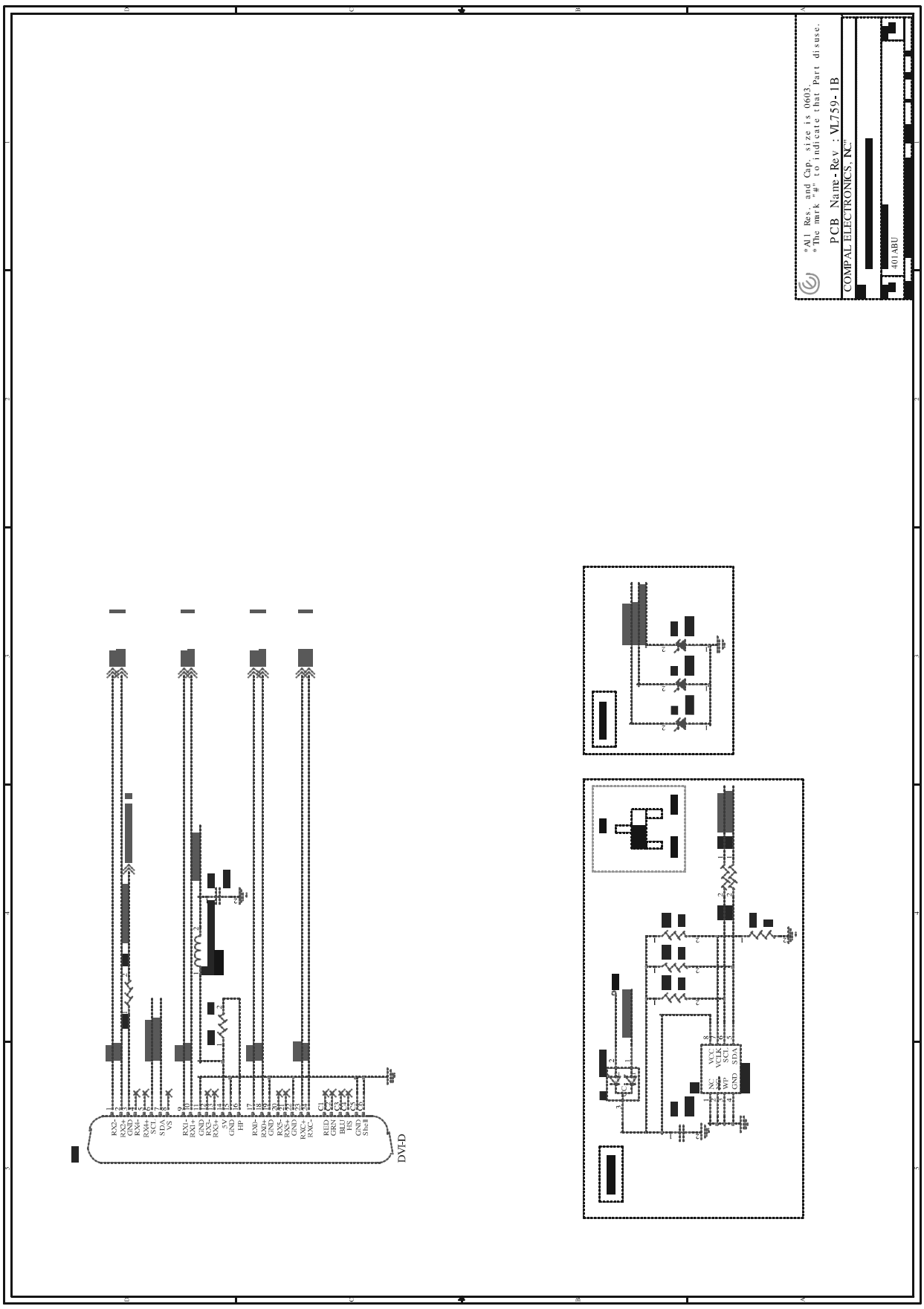
*All Res, and Cap, size is 0603.
*The mark "#" to indicate that Part disuse.
PCB Name - Rev : VL759-1B
COMPAL ELECTRONICS, INC.
401ABU
DVI-D
RX2-
RX2+
GND
RX4-
RX4+
SCL
SDA
VS
RX1-
RX1+
GND
RX3-
RX3+
+5V
GND
HP
RX0-
RX0+
GND
RXS-
RXS+
GND
RXC-
RXC+
CL
RED
GRN
BLU
HS
GND
Shell
NC
Addr
WP
GND
VCC
VCLK
SCL
SDA

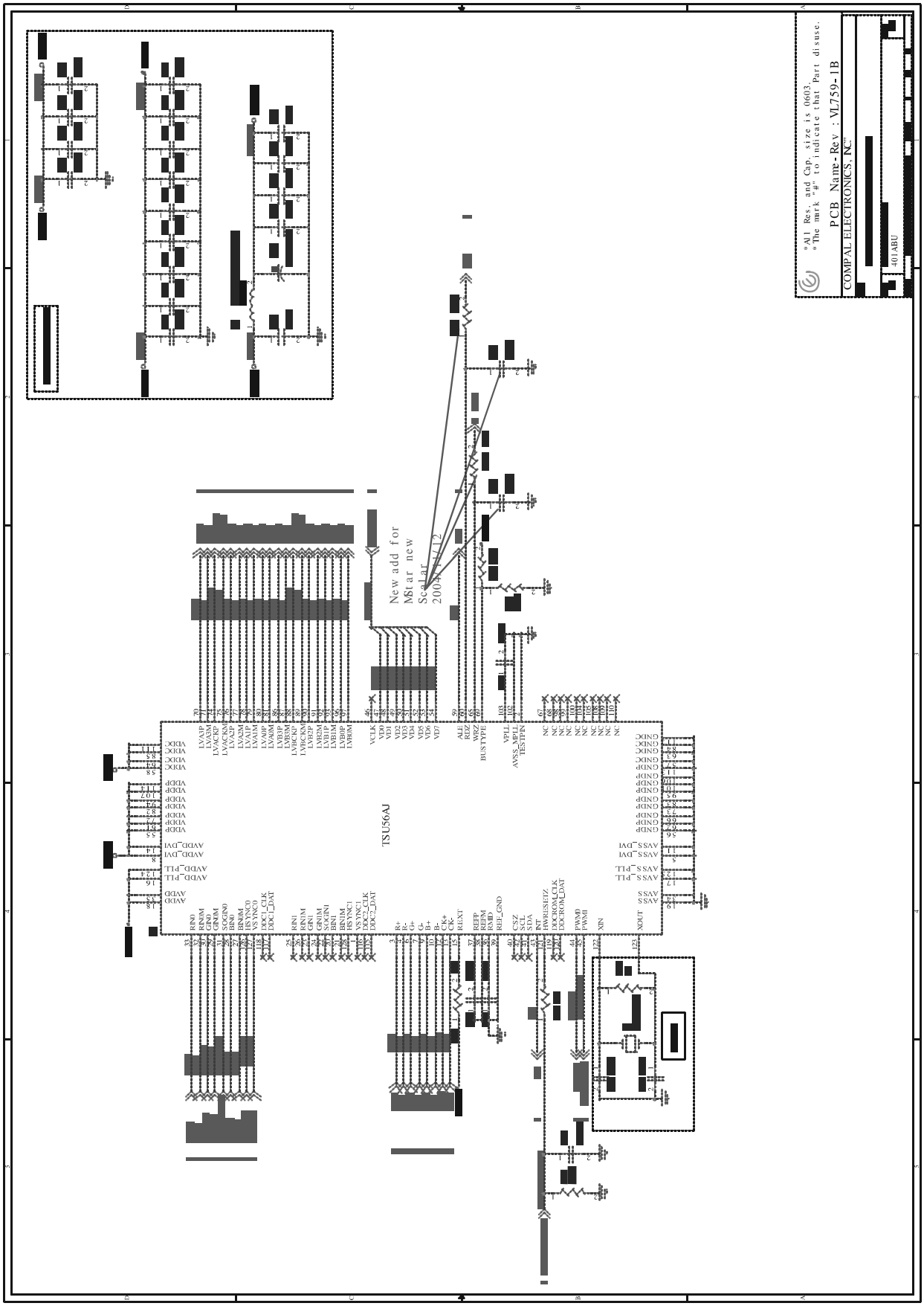
"All Res. and Cap. size is 0603.
"The mark "#" to indicate that Part disuse.
PCB Name-Rev : VL759-1B
COMPAL ELECTRONICS, INC.
401ABU
New add for Mstar new Scalar 2004/02/12
TSU56AJ

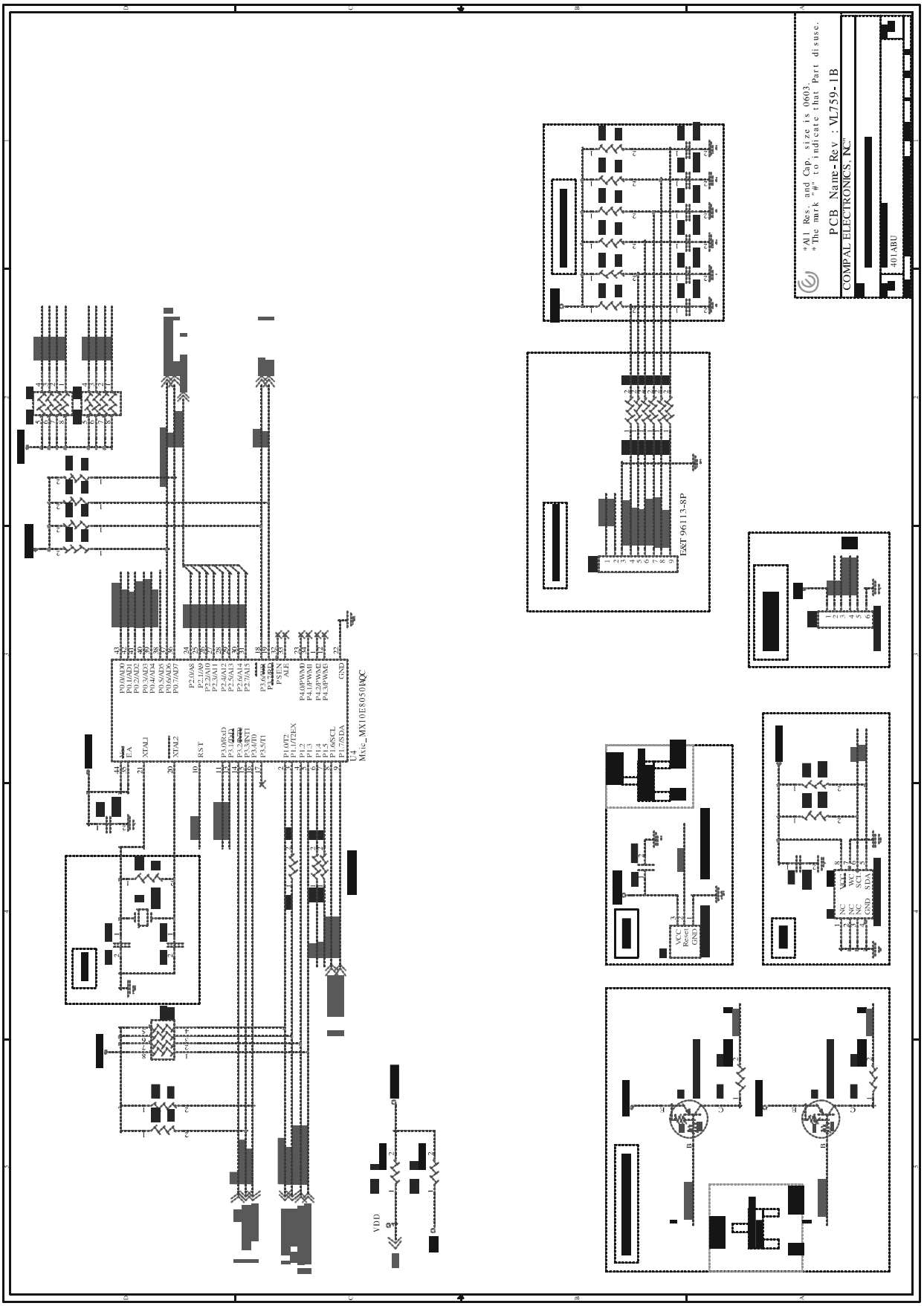
*All Res. and Cap. size is 0603.
*The mark "#" to indicate that Part disuse.
PCB Name-Rev : VL759-1B
COMPAL ELECTRONICS, INC.
401ABU
E&T 96113-8P
Mxic_MX10E8050HQC
VDD

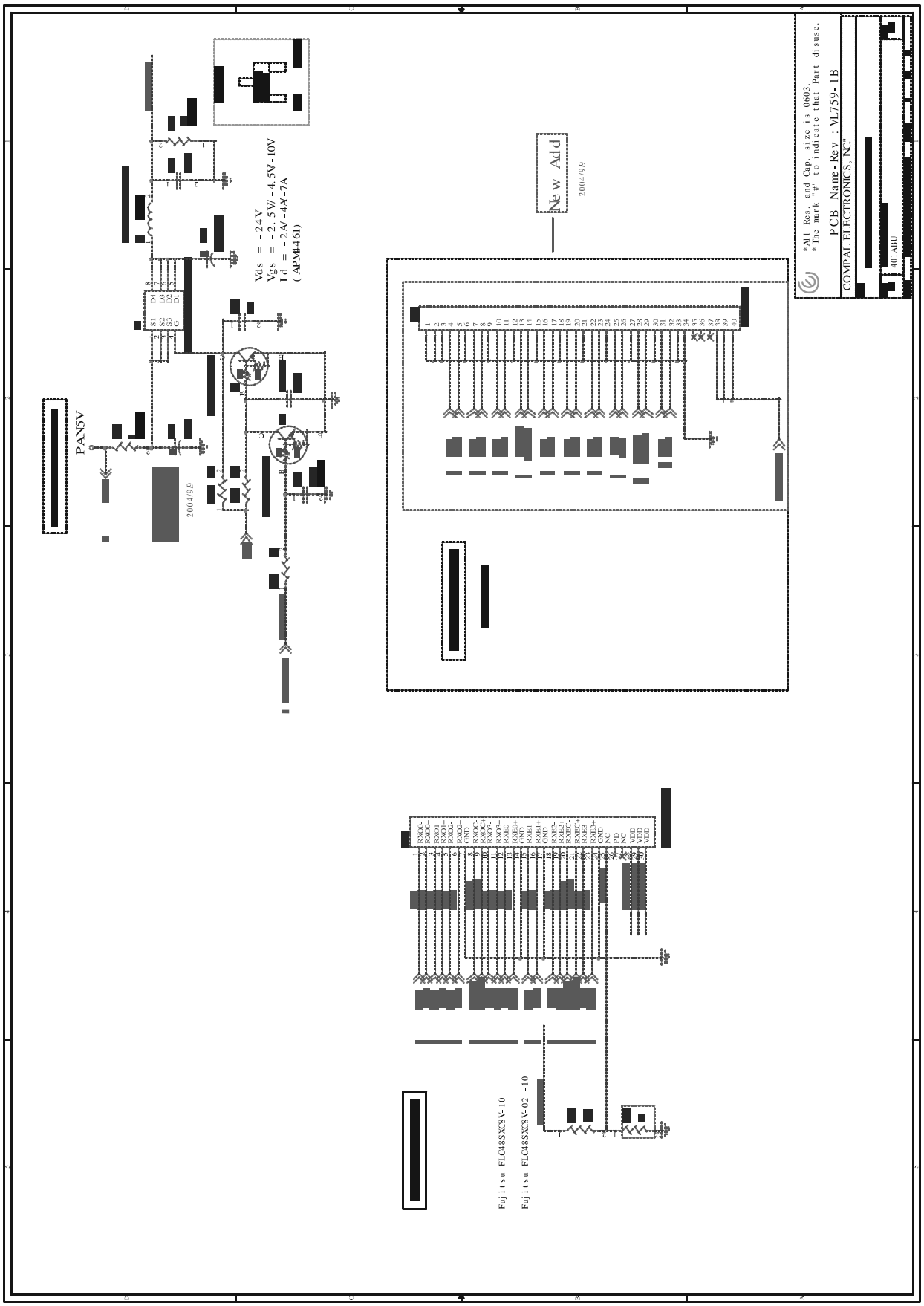
PAN5V
2004/99
Vds = -24V
Vgs = -2.5V/-4.5V~10V
Id = -2A/-4A~7A
(APM4461)
New Add
2004/99
Fujitsu FLC48SXC8V-10
Fujitsu FLC48SXC8V-02 -10
*All Res. and Cap. size is 0603.
*The mark "#" to indicate that Part disuse.
PCB Name - Rev : VL759-1B
COMPAL ELECTRONICS, INC.
401ABU

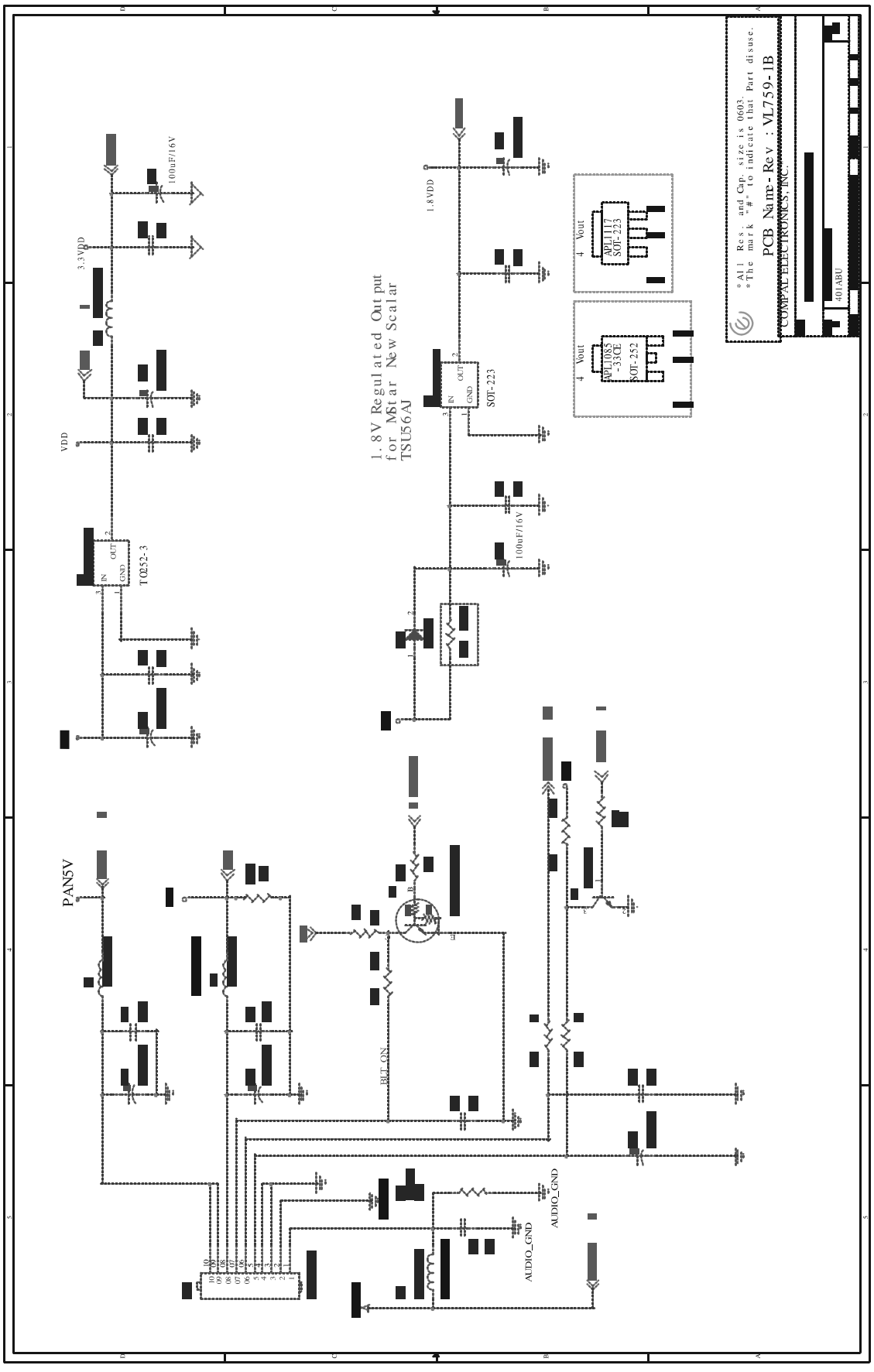
1.8V Regulated Output
for MStar New Scalar
TSU56.AJ
PAN5V
3.3VDD
1.8VDD
VDD
100uF/16V
TO252-3
SOT-223
APL1085
-33CE
TO-252
APL1117
SOT-223
Vout
IN
OUT
GND
BLT_ON
AUDIO_GND
*All Res. and Cap. size is 0603.
*The mark "#" to indicate that Part disuse.
PCB Name - Rev : VL759-1B
COMPAL ELECTRONICS, INC.
401ABU

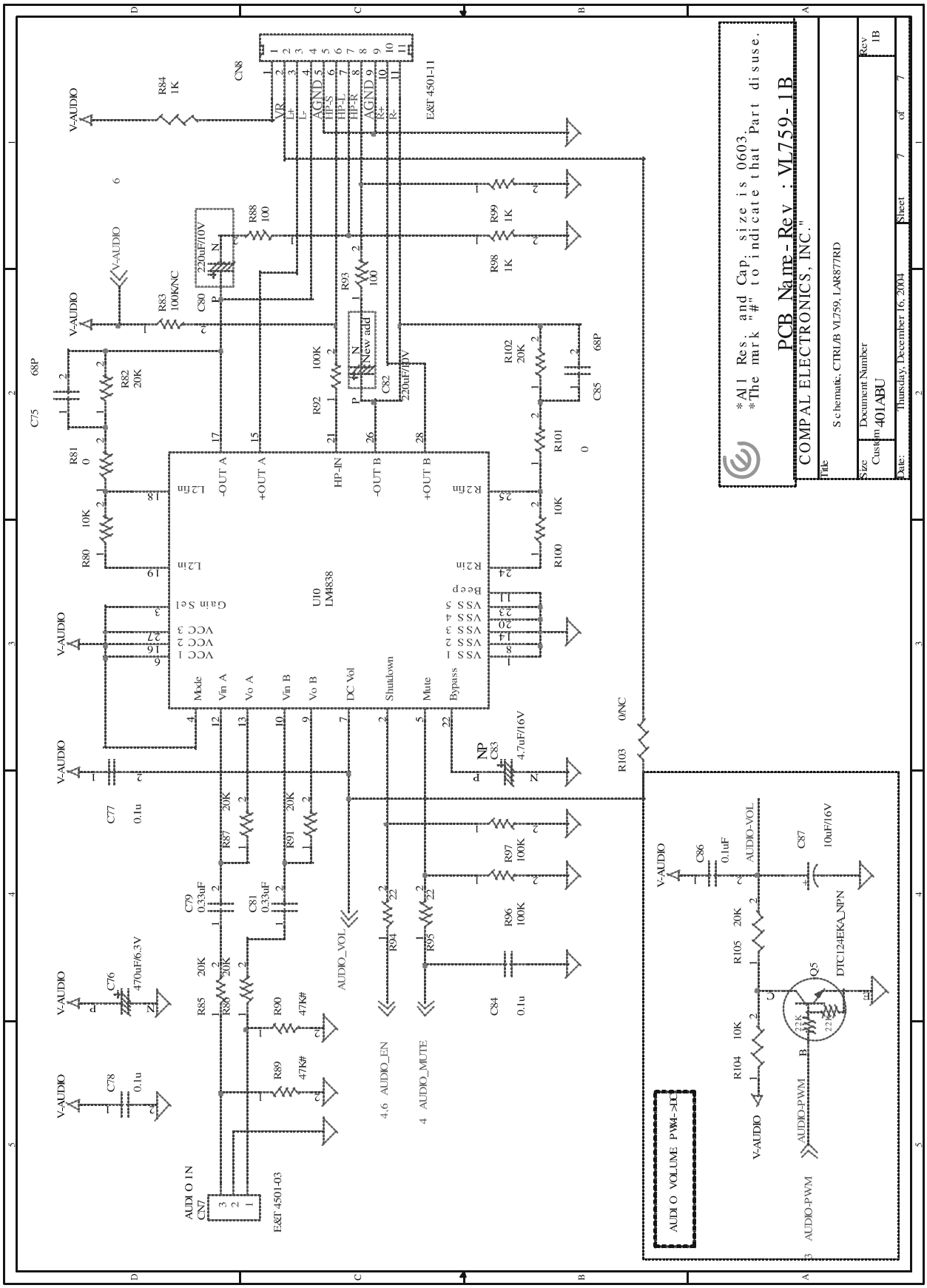
*All Res. and Cap. size is 0603.
*The mark "#" to indicate that Part disuse.
PCB Name - Rev : VL759-1B
COMPAL ELECTRONICS, INC."
Schematic, CTRL/B VL759, LA8877RD
Document Number
401ABU
Rev
1B
Thursday, December 16, 2004
Sheet 7 of 7
V-AUDIO
AUDIO-PWM
AUDIO_VOL
AUDIO_EN
AUDIO_MUTE
AUDIO VOLUME PWM->DC
U10
LM4838
E&T 4501-11
E&T-4501-03
DTC124EKA_NPN
New add
NP
0/NC

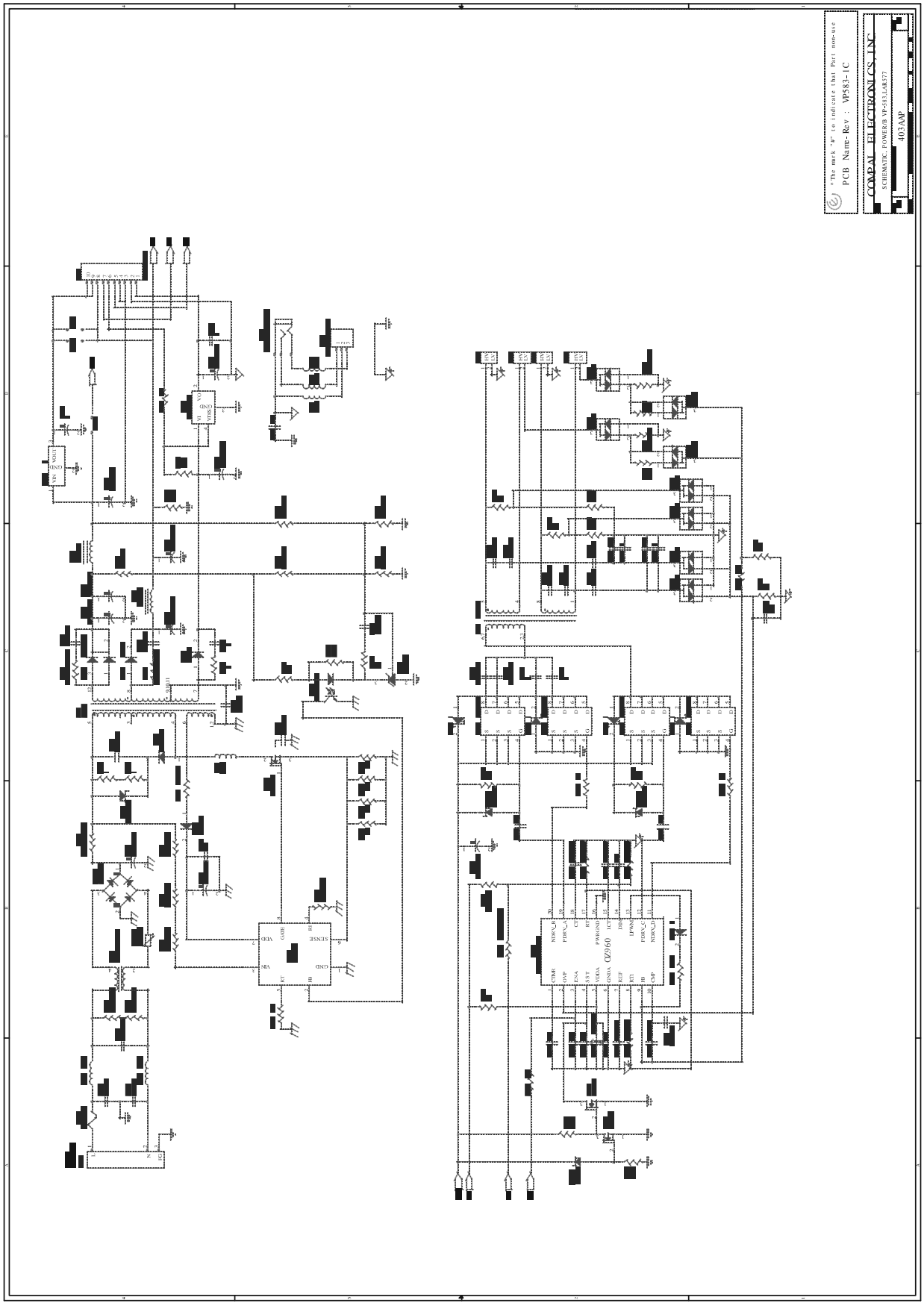
* The mark "#" to indicate that Part non-use
PCB Name-Rev : VP583-1C
COMPAL ELECTRONICS, INC
SCHEMATIC, POWER/B VP-583,LA8577
403AAP
OZ960

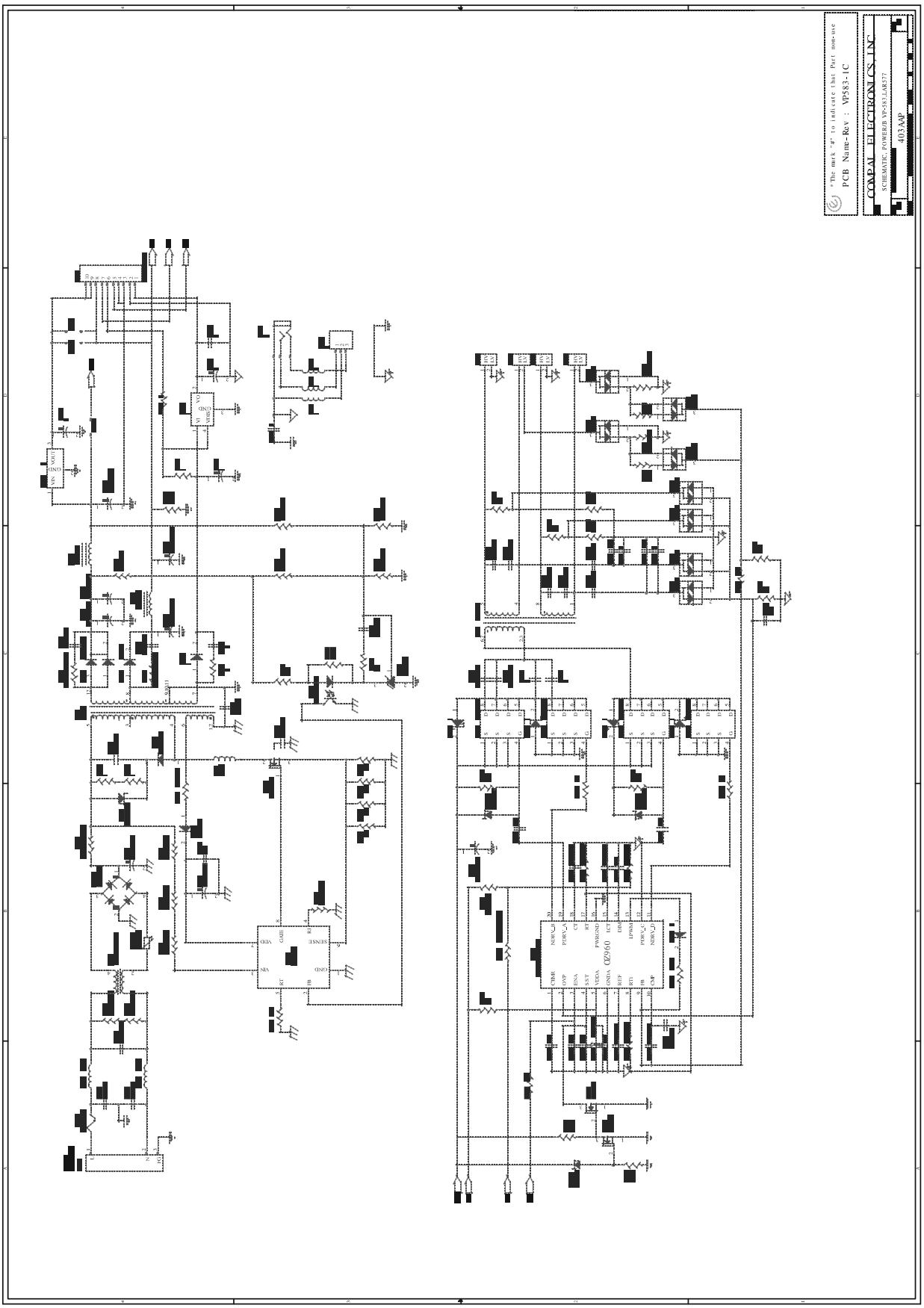

"The mark "#" to indicate that Part non-use
PCB Name-Rev : VP583-1C
COMPAL ELECTRONICS, INC
SCHEMATIC, POWER/B VP-583,LAR577
403AAP
OZ960

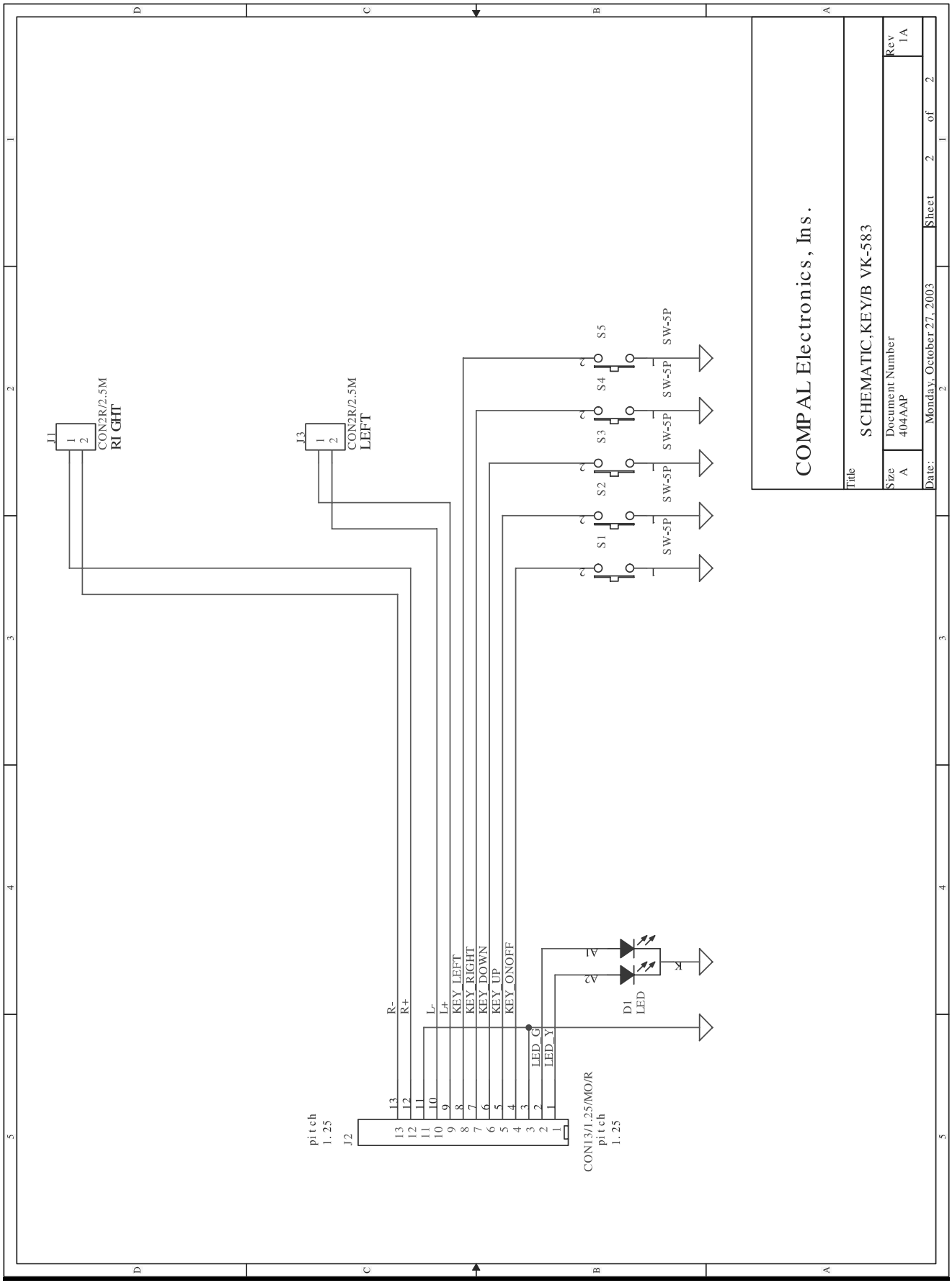
COMPAL Electronics, Ins.
SCHEMATIC,KEY/B VK-583
Size A
Document Number 404AAP
Rev 1A
Date: Monday, October 27, 2003
Sheet 2 of 2
J1
CON2R/2.5M
RIGHT
J3
CON2R/2.5M
LEFT
S1
S2
S3
S4
S5
SW-5P
D1
LED
J2
pitch 1.25
CON13/1.25/MO/R pitch 1.25
R-
R+
L-
L+
KEY_LEFT
KEY_RIGHT
KEY_DOWN
KEY_UP
KEY_ONOFF
LED_G
LED_Y